Wireless Powered All-Round White LED Navigation Pole Light

SC-NAV-01 **Black 610mm (24”)** / SC-NAV-02 **Black 1220mm (48”)**

SC-NAV-T1	
Input Voltage	11-14V DC (12V Systems Only)
Input Current	0.5A Max
Output Power Max	2.5W
Standby Power Draw	<0.3W
Waterproof Rating	**Electronics:** IPX6 **Sprung Lid:** IPX4
Certification	CE, ROHS, UN ECE R10, FCC, WEEE, UKCA, C-TICK, IC, PSE, Ignition Protection ISO 8846

SC-NAV-01 / SC-NAV-02	
Light Type	LED
Approvals	Meets global specs for: ABYC-5, NMMA type accepted, EN/ISO 19009:2015, ABYC A-16 (2016), 1972 COLREGS, USCG 33 CFR - 2nm, RCD 2013/53/EU
Pole Length See table below for full length breakdown	**SC-NAV-01:** 610mm (24”) **SC-NAV-02:** 1220mm (48”)
Pole Diameter	19.2mm (3/4”)
Material	Aluminium - Black

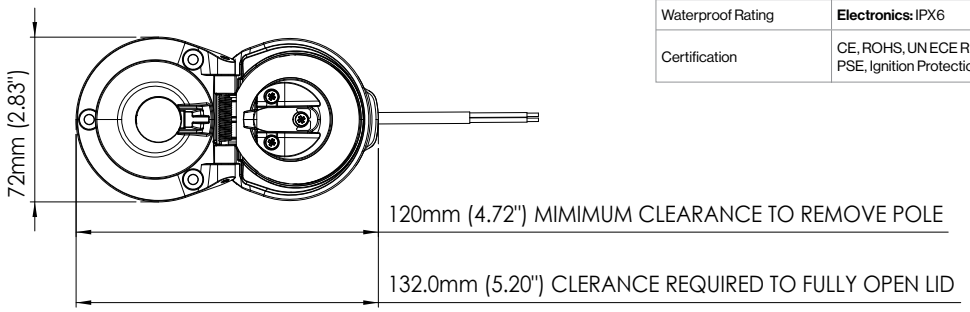

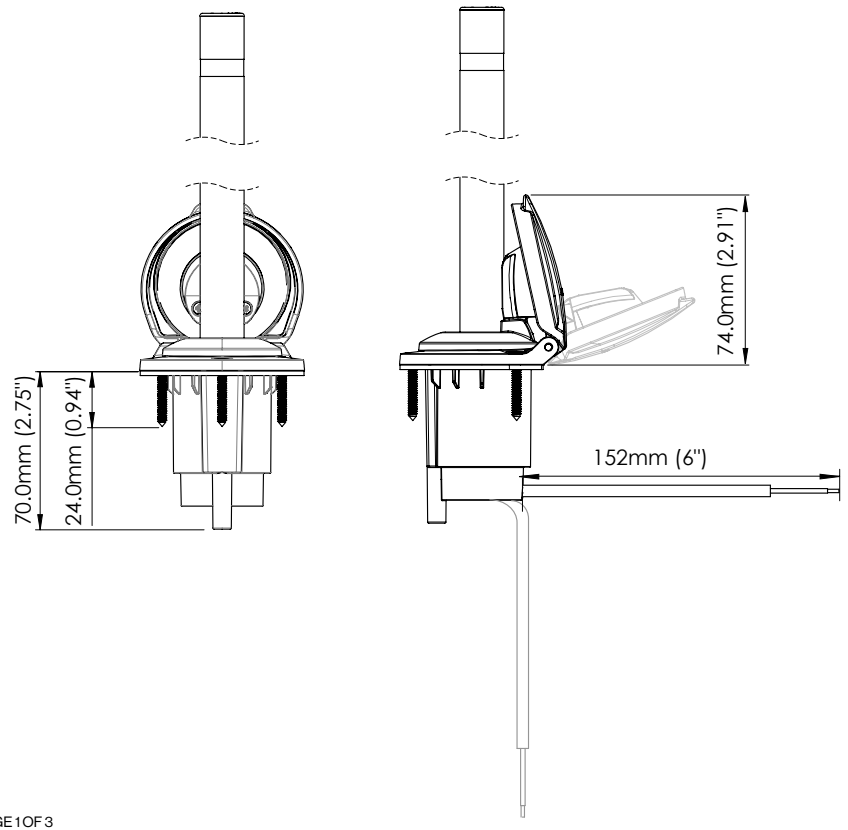

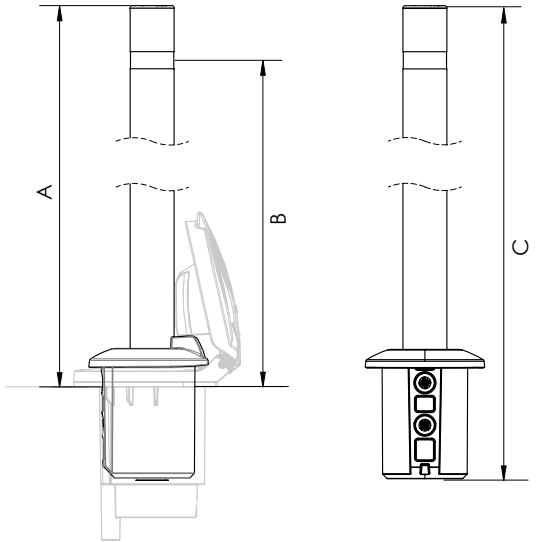

Pole Length Breakdown		
	SC-NAV-01	**SC-NAV-02**
A	634mm (24.96”)	1244mm (48.98”)
B	610mm (24.02”)	1220mm (48.03”)
C	674mm (26.54”)	1284mm (50.55”)

SCANSTRUT

sales@scanstrut.com • usasales@scanstrut.com

Wireless Powered All-Round White LED Navigation Pole Light

SC-NAV-01 **Black 610mm (24”)** / SC-NAV-02 **Black 1220mm (48”)**

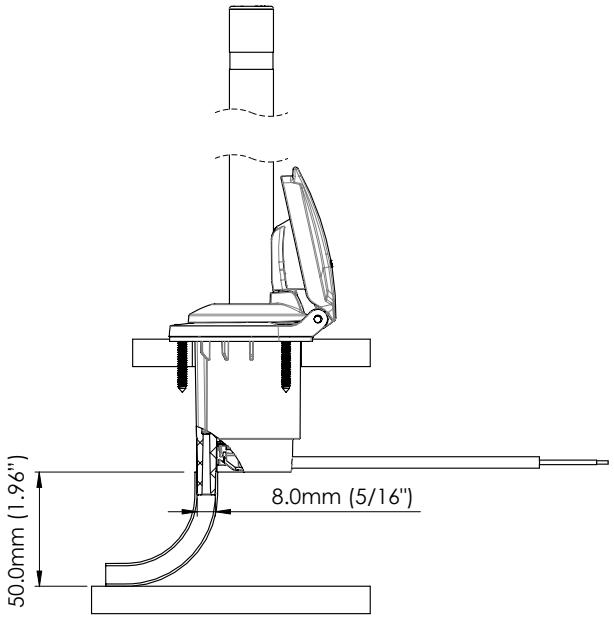

Optional drainage

Drain pipe: ID ø8 mm (5/16") required (Not included)

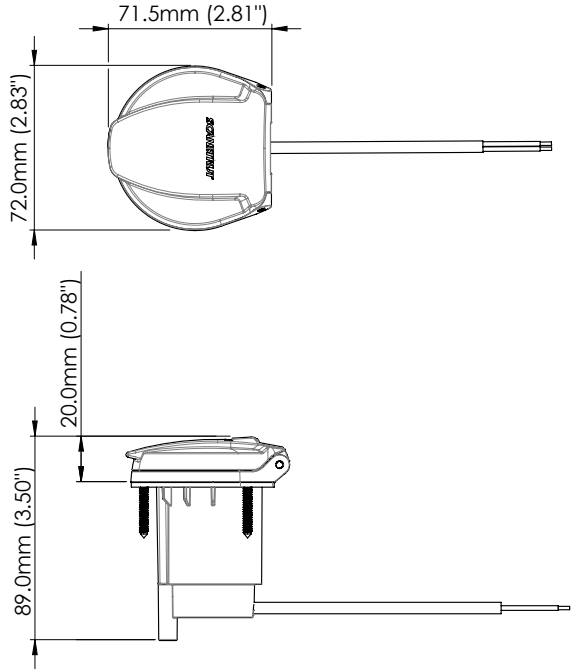

SCANSTRUT
sales@scanstrut.com • usasales@scanstrut.com

Wireless Powered All-Round White LED Navigation Pole Light

SC-NAV-01 **Black 610mm (24”)** / SC-NAV-02 **Black 1220mm (48”)**

Drilling Template Scale 1:1

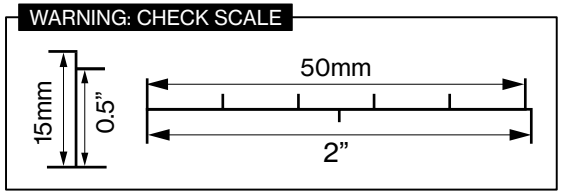

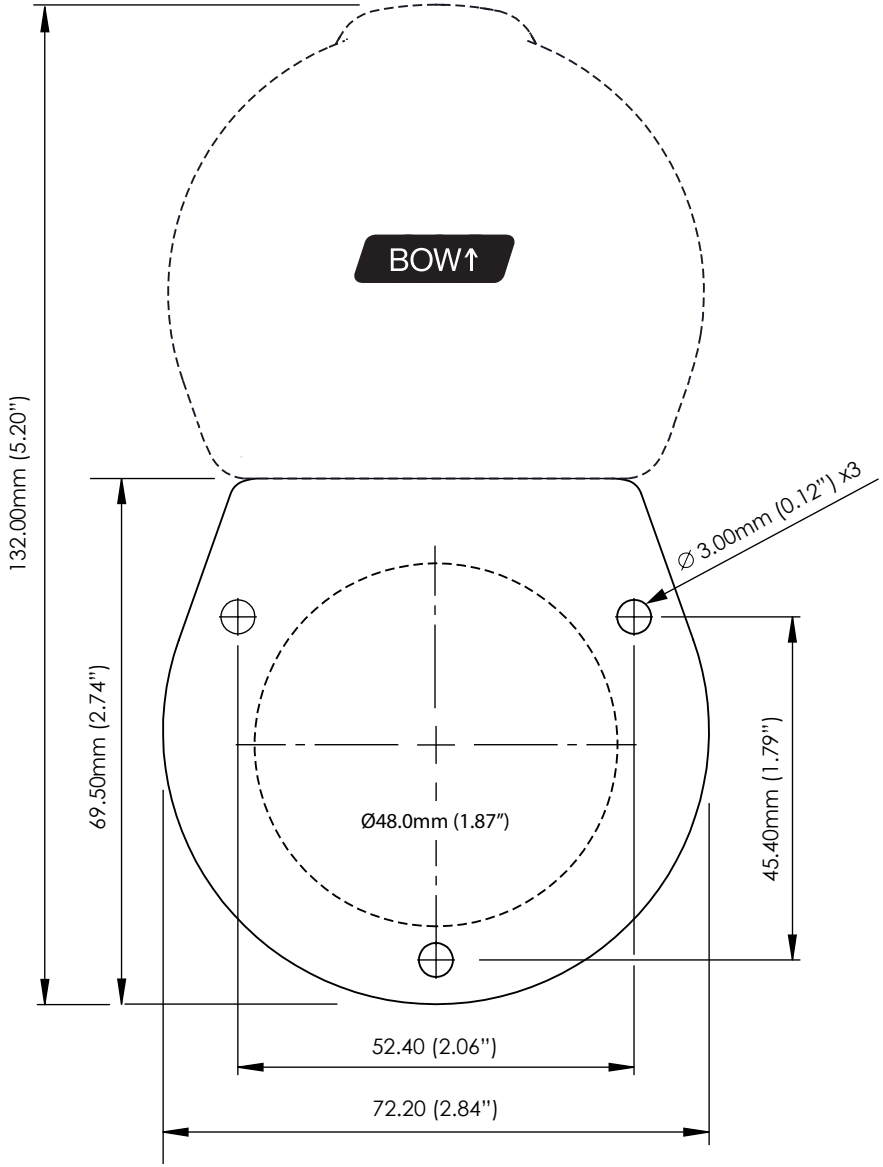

SCANSTRUT

sales@scanstrut.com • usasales@scanstrut.com

TEC-009334