Raymarine®

RSW WIRED

Installation Instructions

Document number: 87465 (Rev 6) | English (en-US) | Date: 06-2026

Legal notices

Trademark and patents notice

Raymarine®, **Tacktick®**, **Pathfinder®**, **Clear Pulse®**, **Truzoom®**, **SeaTalk®**, **SeaTalk HS™**, **SeaTalk NG™**, and **MicroNet™**, are registered or claimed trademarks of Raymarine UK Ltd.
FLIR®, **Fishidy®**, **Fishing Hot Spots®**, **YachtSense™**, **DockSense®**, **RangeFusion™**, **DownVision®**, **SideVision®**, **RealVision®**, **HyperVision™**, **Wi-Fish®**, **Dragonfly®**, **Element®**, **Quantum®**, **Cyclone™**, **Alpha™**, **Axiom®**, **Infrared Everywhere**, **The World's Sixth Sense** and **ClearCruise®** are registered or claimed trademarks of Teledyne FLIR LLC.
All other trademarks, trade names, or company names referenced herein are used for identification only and are the property of their respective owners.
This product is protected by patents, design patents, patents pending, or design patents pending.

Fair Use Statement

You may print no more than three copies of this manual for your own use. You may not make any further copies or distribute or use the manual in any other way including without limitation exploiting the manual commercially or giving or selling copies to third parties.

Content notice

Please ensure that you have obtained this document only from Raymarine, and that it is the **latest** available version.
There are numerous third-party Internet websites (such as *www.manualslib.com*) hosting Raymarine product manuals. These websites are not authorized by Raymarine to do so, and are often hosting illegitimate or older versions of Raymarine product manuals, which may contain inaccurate or misleading information.
To obtain the latest official documentation for a Raymarine product, please visit the official Raymarine website: www.docs.raymarine.com

Artificial Intelligence (AI) content notice

There are numerous third-party **Artificial Intelligence** (AI) services available to the public, which are capable of providing a summary or transcription of the information provided by official Raymarine publications or websites, either in written or audio/video formats. These services may alter, supplement, or convey the original information provided by Raymarine in inaccurate or misleading ways.
Please ensure that you have obtained this document only from Raymarine, and that it is the **latest** available version.

Language translations notice

The content in this document may be available in languages other than the original source language (English), either via translated documents provided by Raymarine, or translations provided by online translation services. These translations may employ the use of **Artificial Intelligence** (AI) or **Machine Translation** (MT) in the language translations process, which may not provide a wholly accurate or consistent translation of the original English document. Only the original official English documents provided by Raymarine should be considered the authoritative versions of end-user product documentation for Raymarine products.

English (en-US)
Document number: 87465 (Rev 6)
AF;83592;2026-06-08T16:12:27

CONTENTS

CHAPTER 1 IMPORTANT INFORMATION 7
Safety warnings 7
Product warnings 7
Regulatory notices 7
Disclaimer 7
Warranty policy and registration 8
Declaration of Conformity 8
PSTI Compliance 8
Product disposal 8
IMO and SOLAS 8
Technical accuracy 8
Publication copyright 9

CHAPTER 2 DOCUMENT INFORMATION 10
2.1 Applicable products 11
2.2 Document information 11
2.3 Document conventions 11
2.4 Document illustrations 11
2.5 Product documentation 11
Operation instructions 12
2.6 Display software 12

CHAPTER 3 PRODUCT AND SYSTEM OVERVIEW 13
3.1 Product overview 14
3.2 Wind transducer compatibility 14
3.3 System example 15

CHAPTER 4 PARTS SUPPLIED 17
4.1 Parts supplied 18
Additional components 18

CHAPTER 5 PRODUCT DIMENSIONS 19
5.1 Product dimensions — Wind transducer 20
5.2 Product dimensions — Gateway 20

CHAPTER 6 LOCATION REQUIREMENTS 21
6.1 Warnings and cautions 22
6.2 Wind transducer location requirements 22
6.3 Gateway location requirements 22

CHAPTER 7 INSTALLATION 23
7.1 Tools required 24
7.2 Mast cable routing 24
7.3 Mast cable drip loop 25
7.4 Mounting the wind transducer 25
7.5 Mounting the gateway 26

CHAPTER 8 CABLES AND CONNECTIONS — GENERAL INFORMATION 28
8.1 General cabling guidance 29
Cable types and length 29
Cable routing and bend radius 29
Strain relief 29
Circuit isolation 29
Cable shielding 30
8.2 Connections overview 30
8.3 Connecting cables 30

CHAPTER 9 POWER CONNECTION 31
9.1 SeaTalk NG power supply 32
Inline fuse and thermal breaker ratings 32

9.2 SeaTalk NG power cables 32
9.3 SeaTalk NG product loading 33
9.4 SeaTalk NG power connection point.....33
9.5 SeaTalk NG system loading.....33
9.6 Power distribution — SeaTalk NG 34
9.7 Power connection via Autopilot Control Unit (ACU-Series).....36

CHAPTER 10 GROUND CONNECTION 38
10.1 Gateway ground connection 39

CHAPTER 11 CONNECTIONS..... 40
11.1 Connecting the wind transducer 41
11.2 Cutting the mast cable.....41
11.3 Connecting mast cable to the gateway.....42
11.4 Connecting the gateway to the network 43

CHAPTER 12 CONFIGURATION 44
12.1 RSW-Series wind transducer configuration 45
12.2 Configuring RSW-Series wind transducers using LightHouse 4 display.....45
12.3 Configuring the RSW-Series wind transducer using i70 / i70s instrument display 46
12.4 RSW-Series wind transducer internal compass calibration 47
Resetting compass calibration (LightHouse 4).....47
Resetting compass calibration (i70 / i70s) 47

CHAPTER 13 MAINTENANCE..... 48
13.1 Service and maintenance 49
Routine equipment checks 49

CHAPTER 14 TROUBLESHOOTING 50
14.1 Troubleshooting 51
14.2 Wind data troubleshooting 51
14.3 LED diagnostic guidance 52
14.4 LED diagnostics.....52

CHAPTER 15 TECHNICAL SUPPORT 54
15.1 Raymarine technical support and servicing 55
Viewing product information 56
Remote Support via AnyDesk.....56
15.2 Learning resources 57

CHAPTER 16 TECHNICAL SPECIFICATION..... 58
16.1 Physical specification 59
16.2 Power specification 59
16.3 Environmental specification 59
16.4 Conformance specification.....59

CHAPTER 17 SPARES AND ACCESSORIES..... 60
17.1 Spares 61
17.2 GNSS (GPS) receiver accessories.....61
17.3 Heading sensor accessories 62
17.4 Transducer accessories.....62
17.5 SeaTalk NG cables and accessories 63

APPENDIX A SOFTWARE RELEASE HISTORY 69

APPENDIX B SUPPORTED NMEA 2000 PGNS..... 69

CHAPTER 1: IMPORTANT INFORMATION

Safety warnings

Warning: Product installation and operation

• This product must be installed and operated in accordance with the instructions provided. Failure to do so could result in personal injury or damage to your vessel. It may also cause poor product performance or invalidate the product warranty.

• Raymarine highly recommends certified installation by a Raymarine approved installer. A certified installation qualifies for enhanced product warranty benefits. Register your warranty on the Raymarine website: www.bit.ly/rym-warranty

Warning: Switch off power supply

Ensure that the vessel's power supply is switched OFF before starting to install this product. Do NOT connect or disconnect equipment with the power switched on, unless instructed to do so in this document.

Warning: Potential ignition source

This product is NOT approved for use in hazardous/flammable atmospheres. Do NOT install in a hazardous/flammable atmosphere (such as in an engine room or near fuel tanks).

Warning: Working at height

It is recommended that the wind transducer is installed with the mast down. If you intend to install the wind transducer with the mast up then you must adhere to applicable working at height regulations.

Product warnings

Warning: Product grounding

Before applying power to this product, it MUST be correctly grounded, in accordance with the instructions provided.

Warning: 12 Volt dc only

This product must ONLY be connected to a 12 V dc power source.

Regulatory notices

Disclaimer

Raymarine does not warrant that this product is error-free or that it is compatible with products manufactured by any person or entity other than Raymarine.

Raymarine is not responsible for damages or injuries caused by your use or inability to use the product, by the interaction of the product with products manufactured by others, or by errors in information utilized by the product supplied by third parties.

Third-party hardware, such as converters, adapters, routers, switches, Access Points etc., provided by third parties, may be made available directly to you by other companies or individuals under separate terms and conditions, including separate fees and charges. Raymarine UK Ltd or its affiliates have not tested or screened the third-party hardware.

Raymarine has no control over, and is not responsible for:

- (a) the content and operation of such third-party hardware; or:
- (b) the privacy or other practices of such third-party hardware.

The fact that Raymarine's documentation may make reference to such third-party hardware does not indicate any approval or endorsement of any such third-party hardware. Raymarine may reference such third-party hardware only as a convenience.

THIS INFORMATION IS MADE AVAILABLE BY Raymarine ON THE BASIS THAT YOU EXCLUDE TO THE FULLEST EXTENT LAWFULLY PERMITTED ALL LIABILITY WHATSOEVER FOR ANY LOSS OR DAMAGE HOWSOEVER ARISING OUT OF THE USE OF THIS INFORMATION OR RELIANCE UPON THIS INFORMATION.

Raymarine does not exclude **Raymarine**'s liability (if any) to you for personal injury or death resulting from **Raymarine UK Ltd** negligence, for fraud or for any matter which it would be illegal to exclude or to attempt to exclude.

Warranty policy and registration

Visit the Raymarine website to **read the latest warranty policy**, and **register** your product's warranty online: www.bit.ly/rym-warranty

It is important that you register your product to receive full warranty benefits. Your product package includes a barcode label indicating the serial number of the unit. This serial number is also provided on a label affixed to the product itself. You will need this serial number when registering your product online.

Declaration of Conformity

Declaration of Conformity for product sold into the UK, Australia and New Zealand, and EU member state regions.

Raymarine UK Ltd declares that the product listed below is in conformity with the relevant sections of the listed designated standards and / or other normative documents:

- RSW-Wired short arm Smart Wind transducer, part number E70670

Region	Standard	Mark
UK	EMC Regulations 2016	UK CA
EU	EMC Directive 2014/30/EU	CE
Australia and New Zealand	AS/NZS 4417.1 & 2	

The original Declaration of Conformity certificates may be obtained via the documentation page at www.bit.ly/rsw-wired-docs

PSTI Compliance

For products sold into the United Kingdom (UK), use the following link to obtain the product's Statement of Compliance with the *Product Security and Telecommunications Infrastructure* (PSTI) Regulations:

Visit the following web address and enter the product's model name or number (SKU) into the provided search field:

- www.bit.ly/rym-sec-com

Product disposal

Dispose of this product in accordance with the WEEE Directive.

The Waste Electrical and Electronic Equipment (WEEE) Directive requires the recycling of waste electrical and electronic equipment which contains materials, components and substances that may be hazardous and present a risk to human health and the environment when WEEE is not handled correctly.

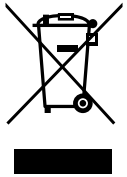

Equipment marked with the crossed-out wheeled bin symbol indicates that the equipment should not be disposed of in unsorted household waste. Local authorities in many regions have established collection schemes under which residents can dispose of waste electrical and electronic equipment at a recycling center or other collection point. For more information about suitable collection points for waste electrical and electronic equipment in your region, refer to the Raymarine website: https://bit.ly/rym-recycling

IMO and SOLAS

The equipment described within this document is intended for use on leisure marine boats and workboats NOT covered by International Maritime Organization (IMO) and Safety of Life at Sea (SOLAS) Carriage Regulations.

Technical accuracy

To the best of our knowledge, the information in this document was correct at the time it was produced. However, Raymarine cannot accept liability for any inaccuracies or omissions it may contain.

In addition, our policy of continuous product improvement may change specifications without notice. As a result, Raymarine cannot accept liability for any differences between the product and this document. Please check the Raymarine website to ensure you have the most up-to-date version(s) of the documentation for your product: www.docs.raymarine.com

Publication copyright

Copyright ©2026 Raymarine UK Ltd. All rights reserved. No parts of this material may be copied, translated, or transmitted (in any medium) without the prior written permission of Raymarine UK Ltd.

CHAPTER 2: DOCUMENT INFORMATION

CHAPTER CONTENTS

- 2.1 Applicable products (page 11)
- 2.2 Document information (page 11)
- 2.3 Document conventions (page 11)
- 2.4 Document illustrations (page 11)
- 2.5 Product documentation (page 11)
- 2.6 Display software (page 12)

2.1 Applicable products

This document is applicable to the following products:

- RSW-Wired Performance Wind transducer and NMEA 2000 wired gateway, part number: E70670

2.2 Document information

This document contains important information related to the installation of your Raymarine product.

The document includes information to help you:

- Plan your installation and ensure you have all the necessary equipment.
- Install and connect your product as part of a wider system of connected marine electronics.
- Troubleshoot problems and obtain technical support if required.

This and other Raymarine product documents are available to download in PDF format from www.bit.ly/rym-docs

2.3 Document conventions

The following conventions are used throughout this document.

Formatting of user interface menus and settings.

References to menus, setting options and physical buttons are formatted using square brackets [].
Examples:

- "You can select your desired cartography from the *[Cartography selection]* menu."
- "MFD apps are accessed from the *[Homescreen]*."
- "Press the *[Home]* button to return to the Homescreen."

Procedures for performing specific tasks using the product's user interface.

The term "**Select**" is used to refer to the action of:

- Touchscreen control — using your finger to select a menu option or item on the screen.
- Physical buttons — Highlighting an item using the navigational controls and confirming the selection by pressing the *[OK]* button.

Examples:

- "Select *[Ok]* to confirm your selection."
- "Select *[Set-up]*."

Procedures for navigating menu hierarchies.

Menu hierarchies are used in this document to provide a quick summary on how to access a particular function or menu option.
Examples:

- "The internal sonar module is disabled using the Fishfinder app menu: *[Menu > Set-up > Sounder Set-up > Internal Sounder]*."
- "The internal GPS can be switched off from the GPS settings menu: *[Homescreen > Status area > Satellites > Settings > Internal GPS]*."

2.4 Document illustrations

While every effort is made to ensure that the illustrations provided in this publication accurately reflect the final released product, due to editorial and production lead times, your product — and if applicable — its user interface, may differ slightly from the illustrations provided in this document, depending on product variant and date of manufacture.

All images are provided for illustration purposes only.

2.5 Product documentation

The following documentation is applicable to your product:

Applicable documents

- **87465** — RSW-Wired Performance Wind Installation Instructions (This document)
- **87459** — RSW-Wired Wind Transducer & Smart Wind Wired Gateway Mounting Template

All product documentation is available from the Raymarine website: www.bit.ly/rym-docs

Operation instructions

For detailed operation instructions for your product, refer to the documentation that accompanies your display.

All product documentation is available to download from the Raymarine website: www.bit.ly/rym-docs

2.6 Display software

Ensure that your display software is updated to the latest version.

To update your display software, refer to the relevant *Operations Instructions* document for your display.

For the latest software for your display, refer to the Raymarine website: www.bit.ly/rym-software

CHAPTER 3: PRODUCT AND SYSTEM OVERVIEW

CHAPTER CONTENTS

- 3.1 Product overview (page 14)
- 3.2 Wind transducer compatibility (page 14)
- 3.3 System example (page 15)

3.1 Product overview

The RSW-Wired is a short arm Smart Wind transducer system designed for performance sailors.

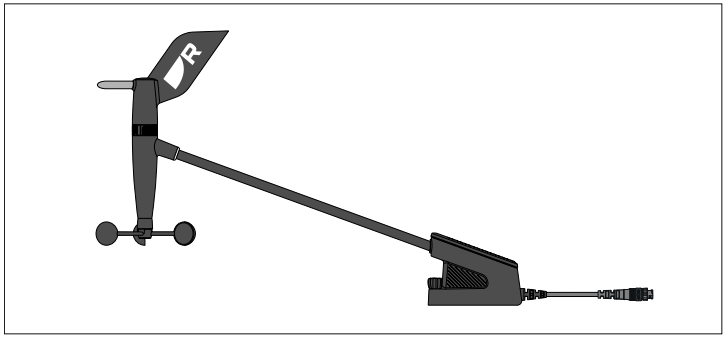

The RSW-Wired Smart Wind transducer is a precision instrument, combining a high performance AHRS 3D sensor with intelligent onboard data processing — no external processing unit required. The integrated design provides a greatly simplified installation and low-latency vane response times.

The RSW-Wired Smart Wind transducer has the following features:

- 3D sensor and Smart Wind technology deliver improved wind speed and direction stability from tack to tack, by compensating for:
  - Boat speed.
  - Leeway.
  - Mast twist and bend.
  - Mast rotation.
  - Dynamic vessel motion (pitch and roll).
  - Sail effects (upwash calculations).
- Embedded 9-axis Attitude and Heading Reference System (AHRS) sensor:
  - **gyro** operating on 3 axis.
  - **accelerometer** operating on 3 axis.
  - **magnetometer** operating on 3 axis.
- Highly accurate measurement of wind speed and direction — no calibration tables needed.
- Precision design for increased accuracy.
- Lightweight arm design with rigid carbon construction.
- NMEA 2000 wired gateway included, for connection to SeaTalk NG or DeviceNet backbones.

3.2 Wind transducer compatibility

The wind transducer uses NMEA 2000 PGN 130306 to transmit wind data to the network. Any Raymarine or third party instrument display / MFD (chartplotter) capable of receiving this PGN can display the transducer's wind data.

However, to benefit from the full range of features available with the wind transducer, additional data sources are required:

Using the wind transducer in non-Raymarine systems

When using the wind transducer on an NMEA 2000 network which contains only third-party (non-Raymarine) equipment, the following list of restrictions applies:

- Leeway and Sail effect (upwash calculation) corrections which are enabled by default cannot be disabled.
- Rotating mast configuration settings which are disabled by default cannot be enabled.
- In the scenario that no vessel heading data is available on your NMEA 2000 network (e.g. from a heading sensor) and your multifunction display / chartplotter is not able to apply a manual vane offset angle, the wind transducer **must** be installed **directly on the mast centerline**. This is because an offset angle cannot be applied to account for the difference between the mast's centerline and the wind transducer's installation angle.

Note:
For a full list of NMEA 2000 PGNs transmitted by the wind transducer, refer to:

- **p.69 — Supported NMEA 2000 PGNs**

Using the wind transducer in systems with Raymarine displays

For optimum performance, the wind transducer can be partnered with compatible Raymarine displays:

- Axiom-Series multifunction display / chartplotter, running LightHouse 4 version v4.6.103 or later.
- Axiom 2-Series multifunction display / chartplotter, running LightHouse 4 version v4.11.103 or later.
- Alpha-Series display, running software version v1.0.77 or later.
- i70 or i70s instrument, running software version v3.22 or later.

Displaying mast rotation angle data

In order to display mast rotation angle data, the following Raymarine devices must be available on the network:

- Axiom-Series multifunction display / chartplotter, running LightHouse 4 version v4.6.103 or later.
- Axiom 2-Series multifunction display / chartplotter, running LightHouse 4 version v4.11.103 or later.
- Vessel heading data from a separate heading sensor is required. Examples of Raymarine devices that produce vessel heading data include:
  - EV-1 (E70096)
  - EV-2 (E70097)
  - AR200 (E70537)

Additional data requirements

Some of the wind transducer's data output and calculations are dependent on the transducer receiving the following data from other devices.

- **SOG (Speed Over Ground)** and **COG (Course Over Ground)** — this data, typically provided by a GNSS (GPS) receiver, is required for a networked multifunction display / chartplotter to output Ground wind data.
- **Vessel heading** — this data, usually provided by a heading sensor or autopilot system, is required for a networked multifunction display / chartplotter to output Mast rotation angle data.
- **STW (Speed Through Water)** — this data, provided by a speed transducer, is required for a networked multifunction display / chartplotter to output accurate True Wind and Back-calculated Apparent Wind data. Without a speed transducer, the data will be approximated only, and is therefore less accurate.

Note:

- For a list of available speed transducers and heading sensors, refer to:
  - **p.60 — Spares and accessories**
- For a list of supported NMEA 2000 PGNs refer to:
  - **p.69 — Supported NMEA 2000 PGNs**

3.3 System example

The system example below shows devices that can be connected in conjunction with the Smart Wind transducer to a multifunction display / chartplotter in order to display and calculate accurate wind data.

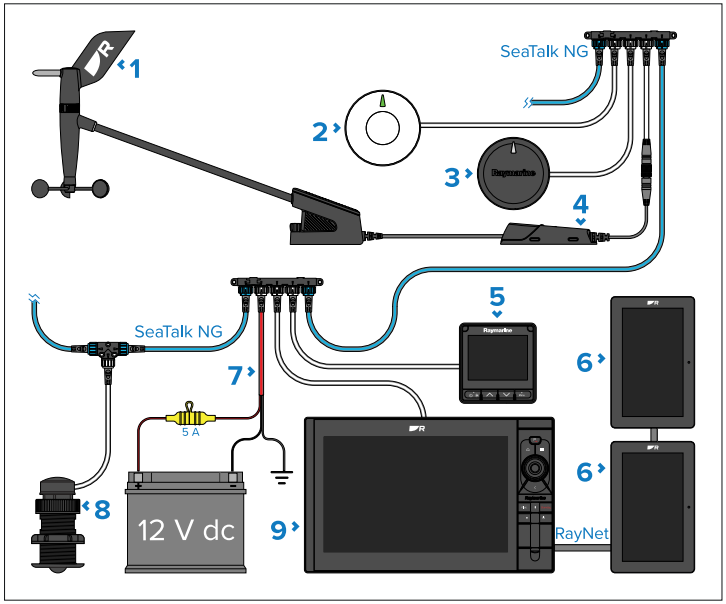

1. RSW-Wired Smart Wind transducer.
2. GNSS (GPS) receiver (e.g.: RS150).
3. Heading sensor (e.g.: EV-1).
4. NMEA 2000 gateway (supplied).

5. i70s instrument display, running software version v3.22, or later.
6. Alpha displays.
7. SeaTalk NG 12 V dc power connection.
8. Speed transducer (e.g.: DST800).
9. MFD / charplotter (e.g.: Axiom 2 Pro), running LightHouse 4, v4.6.103 or later.

Note:

• In order for your connected multifunction display / chartplotter to calculate and display True wind values, Speed Through Water (STW) (received from a speed transducer) and Heading (received from a heading sensor) data must be available on the network.

• In order for your connected multifunction display / chartplotter to calculate and display Ground wind values, a GNSS (GPS) receiver is required.

• For more information on the available speed transducers and heading sensors, refer to: **p.60 — Spares and accessories**

CHAPTER 4: PARTS SUPPLIED

CHAPTER CONTENTS

- 4.1 Parts supplied (page 18)

4.1 Parts supplied

The following parts are included:

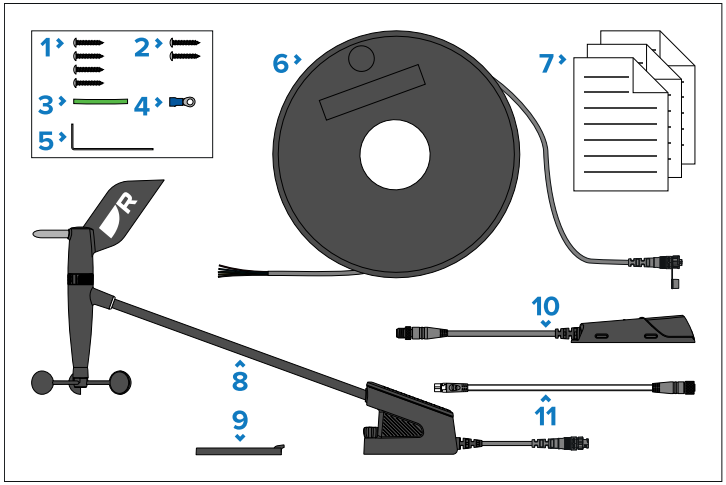

	Description
1	No.10 x 3/4" self tapping screws x 4 (for mounting the wind transducer).
2	No.7 x 3/4" self tapping screws x 2 (for mounting the gateway).
3	40 mm (1.57 in) heat shrink tube (required to insulate ground wire when shortening the mast cable).
4	Ring crimp terminal (required for additional ground connection when the gateway is not mounted on a **metal** surface **which is already grounded**).
5	Hex wrench (Allen key), 3 mm (0.04 in).
6	Mast cable, 30 m (98.43 ft) reel.
7	Documentation pack.
8	RSW-Wired Smart Wind transducer.
9	Mounting plate.
10	NMEA 2000 Wired gateway.
11	SeaTalk NG to DeviceNet adaptor cable, 120 mm (4.72 in).

Additional components

Depending on installation the following additional components may be required:

1. Suitable cable for gateway ground connection.
2. M4 x 10 machine screw and M4 nut (for gateway ground connection when the gateway is **not** mounted on a surface).
3. 4 x fixings suitable for wind transducer mounting (if supplied screws are not suitable).
4. 2 x fixings suitable for gateway mounting (if supplied screws are not suitable).
5. Soldering iron and suitable solder (required to re-tin mast cable wires if cut).
6. Cable clips for mast cable.

CHAPTER 5: PRODUCT DIMENSIONS

CHAPTER CONTENTS

- 5.1 Product dimensions — Wind transducer (page 20)
- 5.2 Product dimensions — Gateway (page 20)

5.1 Product dimensions — Wind transducer

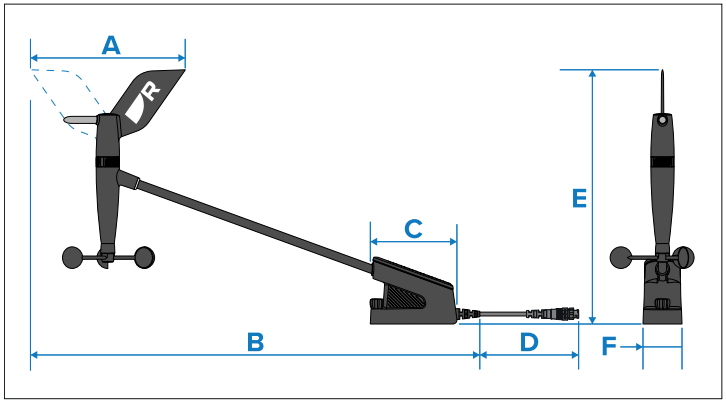

	Description		Description
A	186.22 mm (7.33 in)	**B**	540.71 mm (21.29 in)
C	104.26 mm (4.10 in)	**D**	118.50 mm (4.67 in)
E	305.86 mm (12.04 in)	**F**	46.96 mm (1.85 in)

Cable length

The wind transducer is supplied with a 30 m (98.43 ft) mast cable. For longer cable runs, a 50 m (160.76 ft) mast cable is also available separately (part number: R70945).

5.2 Product dimensions — Gateway

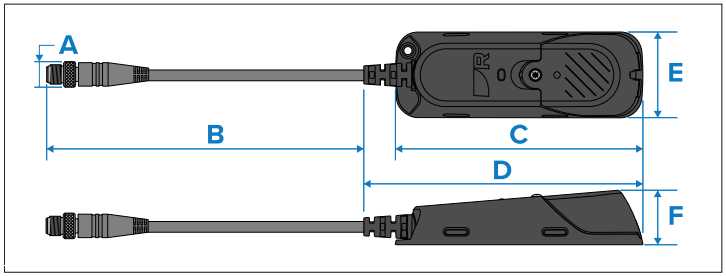

	Description		Description
A	14.70 mm (0.58 in)	**B**	176.80 mm (6.96 in)
C	137.98 mm (5.43 in)	**D**	155.61 mm (6.13 in)
E	47.83 mm (1.88 in)	**F**	30.61 mm (1.21 in)

CHAPTER 6: LOCATION REQUIREMENTS

CHAPTER CONTENTS

- 6.1 Warnings and cautions (page 22)
- 6.2 Wind transducer location requirements (page 22)
- 6.3 Gateway location requirements (page 22)

6.1 Warnings and cautions

Important:
Before proceeding, ensure that you have read and understood the warnings and cautions provided in the following section of this document:

• **p.7 — Important information**

6.2 Wind transducer location requirements

When selecting a location for your wind transducer, it is important to consider a number of factors.

- It is recommended the transducer is installed facing forwards.
- The mounting surface must be horizontal. If the surface is not horizontal, use an accessory provided by your mast manufacturer or a suitable shim to create a horizontal surface.
- The transducer should be mounted as high as possible and away from any equipment which may shield the transducer or otherwise disturb the air flow to the transducer.
- It should be far enough away from equipment or cabling that may cause interference, such as masthead lights or Radar cabling.
- There must be a viable route for the transducer's cable to be routed to the supplied gateway.
- The vane and cups must be able to spin freely.
- There is sufficient access for installation and servicing.

6.3 Gateway location requirements

The gateway can either be mounted on a flat surface using fixings, or secured in a suitable location using cable ties. When selecting a location for the gateway, it is important to consider a number of factors.

- **Potential ignition source** — This product is NOT approved for use in hazardous/flammable atmospheres (such as in an engine room or near fuel tanks).
- **Ventilation** — The product should have adequate airflow around it, at all times.
- **Damage** — Install the product in a location where it will be protected from physical damage and vibration.
- **Mounting surface** — Ensure the product is adequately supported on a secure surface. Do not mount the product or cut holes in places which may damage the structure of the vessel.
- **Cabling** — Ensure the product is mounted in a location which allows the proper routing, support and connection of all cables:
  - Minimum bend radius of 100 mm (3.94 in), unless otherwise stated.
  - Use cable clips at regular intervals to prevent stress on connectors.
  - If your installation requires multiple ferrites to be added to a cable, additional cable clips should be used to ensure that the extra weight of the cable is supported.
- **Water ingress** — The product is designed to be installed below decks in a protected area away from prolonged and direct exposure to rain and salt spray. To prevent water ingress, the product's cover must be fitted in all installations.
- **Electrical interference** — Select a location that is far enough away from equipment or cabling that may cause interference, such as motors, generators, radio transmitters or receivers, magnetic compass or power cables.
- **Network connection** — Select a location that is as close as possible to a spur connection on the vessel's SeaTalk NG / NMEA 2000 network cabling. This will help to keep cable runs to a minimum.

CHAPTER 7: INSTALLATION

CHAPTER CONTENTS

- 7.1 Tools required (page 24)
- 7.2 Mast cable routing (page 24)
- 7.3 Mast cable drip loop (page 25)
- 7.4 Mounting the wind transducer (page 25)
- 7.5 Mounting the gateway (page 26)

7.1 Tools required

The following tools are required for installation.

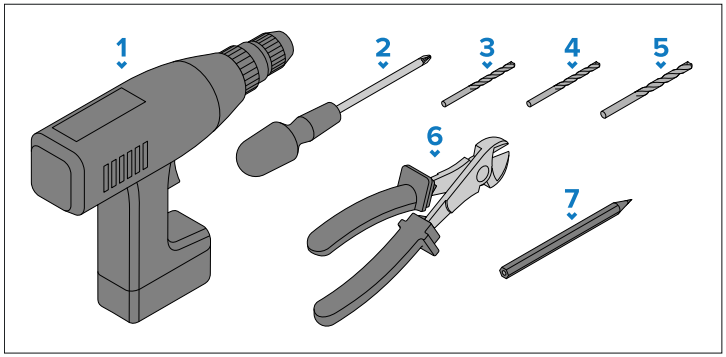

1. Cordless drill.
2. Pozi-drive screw driver.
3. Suitable sized drill bit for mounting the Wind transducer.
4. Suitable sized drill bit for mounting the Gateway.
5. 5 mm (13⁄64 in) drill bit (for mast cable routing).
6. Wire cutters.
7. Pencil or marker.

Note:
Drill bit sizes for mounting holes must be a suitable size for the fixings, the mounting surface material type and the mounting surface thickness (e.g.: a 4 mm (5⁄32 in) drill bit should be used when mounting the wind transducer on an aluminium surface).

7.2 Mast cable routing

When routing the cable inside the mast, the mast cable exit can be located under the mounting plate (the mounting plates includes a cable recess for this purpose) or on the side of the mast.

To keep the size of any holes that need to be drilled for cable routing to a minimum, route the mast cable from the transducer location using the bare wire end first.

- Ensure sufficient slack at the transducer end so that the wind transducer can be disconnected if necessary.
- When drilling routing holes, ensure they are large enough to accommodate the mast cable (which has an approximately diameter of 5 mm (0.20 in)).
- When drilling routing holes, ensure there are no rough edges or burrs before routing any cables.
- The cable should be secured at regular intervals using cable clips, so that the cable is NOT hanging and the cable's weight is supported.
- The cable should be secured inside of a conduit, so that the cable is protected damage.
- Excess cable can be cut once the cable has been routed to the gateway.

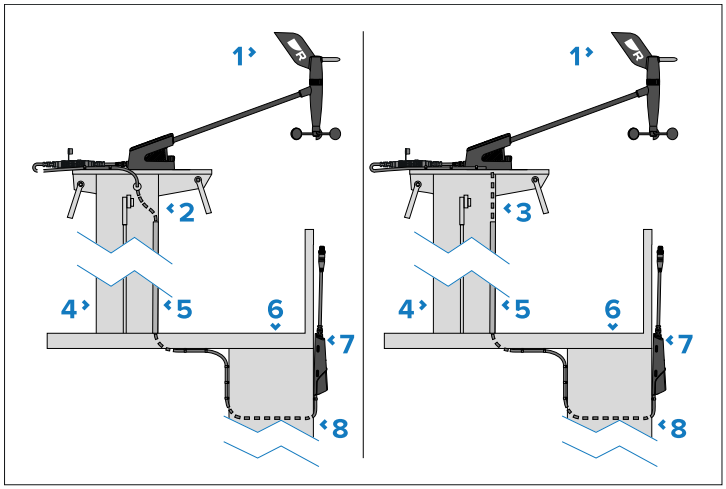

1. RSW-Wired Smart wind transducer.
2. Cable routing internally (side mast cable exit).
3. Cable routing internally (mounting plate cable exit).
4. Mast.
5. Cable conduit.
6. Deck.

7. Gateway.
8. Bulkhead.

7.3 Mast cable drip loop

Moisture in the environment may cause water droplets to form and run down the supplied mast cable.

In order to avoid potential water ingress and subsequent equipment failure, ensure that a drip loop has been formed on your mast cable below the gateway.

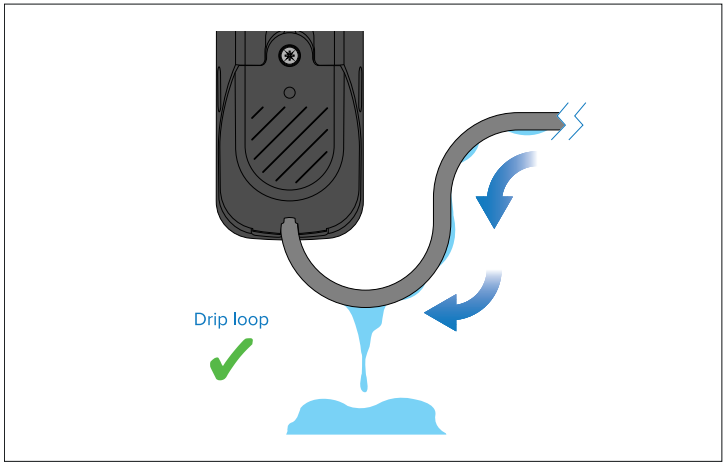

7.4 Mounting the wind transducer

Procedure for mounting the wind transducer.

Pre-requisites:

- Ensure that you have followed the location requirements guidance when choosing your mounting location.
- The unit must be mounted on a horizontal surface. If the mounting surface is not horizontal, create a wedge piece to make the surface horizontal.
- Ensure that the provided fixings are suitable for the mounting surface material and thickness.

Note:
Only self-tapping mounting screws are provided with the product, as it is not assumed that the installer will have the specialist thread-tapping tools required to drill and tap holes in an aluminium mast. However, in cases where this is possible, the preferred mounting method is to drill and tap 4 mounting holes, and then to use 4x M5 machine screws (not supplied) to secure the mounting plate. Ensure that all stainless steel screws in the aluminium mast are fitted using an anti-corrosive jointing compound (e.g. *Duralac*).

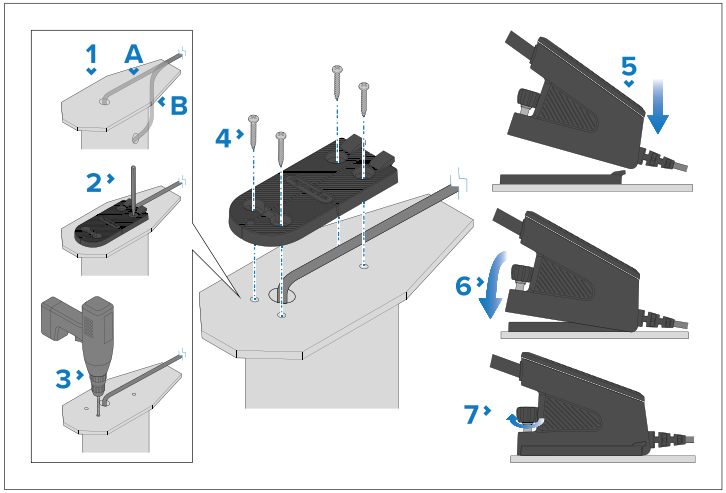

1. Route the mast cable from the top of the mast to the gateway's intended position:

	Cable routing option
A	If you are routing the cable through an exit located under the mounting plate, the cable should be fitted into the cable channel on the bottom of the mounting plate, and then routed down the exit.
B	If you are routing the cable through an exit located on the side of your mast, the cable should instead be fitted around the base of the mounting plate, and then routed down the exit.

2. Use either the mounting plate as a guide or use the supplied mounting template to mark the hole locations on the mounting surface.
3. Drill 4 pilot holes at the marked locations.

Important:

• Additional care needs to be taken when drilling the correct size pilot hole to ensure that the screw can cut a thread in the aluminium mast.

• Pilot hole sizes must be suitable for the material type and thickness of the mounting surface (e.g.: a 4.1 mm (5/32) to 4.7 mm (3/16 in) drill bit should be used when mounting on an aluminium surface).

4. Secure the mounting plate to the mounting surface using the fixings.

   Tighten to a torque of 3.5 N·m (2.58 lbf·ft).
5. Position the wind transducer over the mounting plate, ensuring the tabs on the rear of the mounting plate are inserted into the recesses on the rear of the wind transducer base.
6. Push the wind transducer **forward and down** onto the mounting plate.
7. Secure by tightening the thumb screw until the transducer is secure on the mast plate; after tightening there should be no movement. Ensure adequate tightening of the thumb screw, initially by hand and then further using the thumb screw's hex head and the supplied 3 mm A/F Hex wrench (Allen key). **Do not over-tighten**. (The same method can also be used in reverse for subsequent thumb screw removal, if required).

7.5 Mounting the gateway

Procedure for mounting the gateway. Alternatively, the gateway can be secured in a suitable location using cable ties.

Pre-requisites:

- Ensure you have followed the location requirements guidance when choosing your mounting location.
- When mounting the gateway, it should be mounted vertically below deck on a flat surface as shown below.
- Ensure that the provided fixings are suitable for the mounting surface material and thickness.

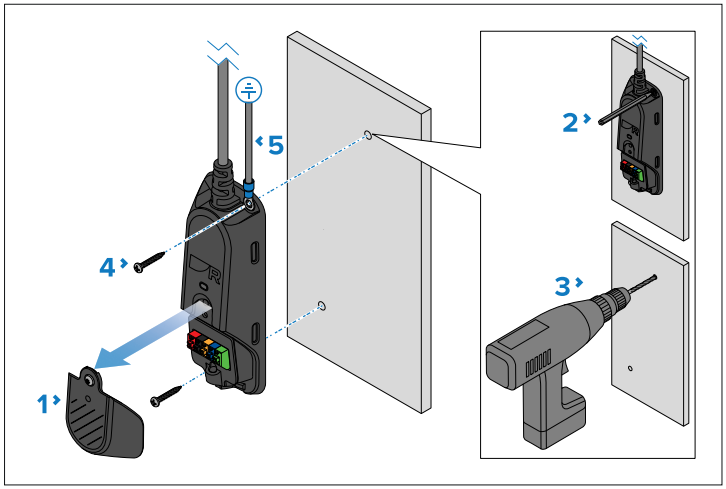

1. Unscrew the cover's retaining screw from the front of the gateway.

   The screw is captive, so it cannot be removed completely.
2. Use either the gateway as a guide or use the supplied mounting template to mark the hole locations on the mounting surface.
3. Drill 2 pilot holes at the marked locations.

Note:
The pilot hole size must be suitable for the material type and thickness of the mounting surface.

4. Secure the gateway to the mounting surface using the fixings.
5. The supplied ring crimp terminal and a suitable cable (not supplied) should be used to create a ground connection. The ring crimp terminal should then be connected to the top fixing hole so that it is secured when tightening the fixings. Connect the other end of the cable to the vessel's RF ground point. If no RF ground is available, connect directly to the vessel's negative (-) battery terminal. For more information, refer to: **p.39 — Gateway ground connection**

Do not replace the cover until all mast cable wires have been connected.

Warning: Potential ignition source

This product is NOT approved for use in hazardous/flammable atmospheres. Do NOT install in a hazardous/flammable atmosphere (such as in an engine room or near fuel tanks).

CHAPTER 8: CABLES AND CONNECTIONS — GENERAL INFORMATION

CHAPTER CONTENTS

- 8.1 General cabling guidance (page 29)
- 8.2 Connections overview (page 30)
- 8.3 Connecting cables (page 30)

8.1 General cabling guidance

Cable types and length

It is important to use cables of the appropriate type and length.

- Unless otherwise stated only use cables supplied by Raymarine.
- Where it is necessary to use non-Raymarine cables, ensure that they are of correct quality and gauge for their intended purpose. (e.g.: longer power cable runs may require larger wire gauges to minimize voltage drop along the run).

Cable routing and bend radius

To maximize cable performance and lifespan, it's important to ensure that all cables are routed correctly and adequate space is provided to allow for each cable's minimum bend radius.

Minimum cable bend radius

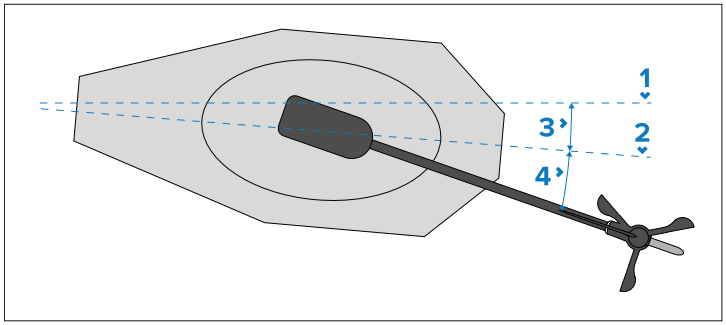

Do NOT bend cables excessively. Wherever possible, ensure that your chosen product installation location allows enough clearance for the minimum cable bend diameter specified in the following table:

	Description	Value
Ø	Cable minimum bend **diameter**.	200 mm (7.87 in.)
R	Cable minimum bend **radius**.	100 mm (3.94 in.)

Note:
For products where multiple different cable types are connected, each with a different minimum cable bend radius, the higher figure is provided in the table above (i.e. the cable with the greatest minimum bend radius is specified).

Cable routing — best practices

- Protect all cables from physical damage and exposure to heat. Use trunking or conduit where possible. Do NOT run cables through bilges or doorways, or close to moving or hot objects.
- Secure cables in place using cable clips or cable ties. Coil any excess cable and tie it out of the way.
- Where a cable passes through an exposed bulkhead or deckhead, use a suitable watertight feed-through (conduit).
- Do NOT run cables near to engines or fluorescent lights.
- Always route data cables as far away as possible from:
  - Other equipment and cables.
  - High current-carrying AC and DC power lines.
  - Antennas.

Strain relief

Use adequate strain relief for cabling to ensure that connectors are protected from strain and will not pull out under extreme sea conditions.

Circuit isolation

Appropriate circuit isolation is required for installations using both AC and DC current:

- Always use isolating transformers or a separate power-inverter to run PCs, processors, displays and other sensitive electronic instruments or devices.
- If using Weather FAX audio cables, always use an isolating transformer.
- If using a third-party audio amplifier, always use an isolated power supply.
- If using an RS232/NMEA converter, always ensure optical isolation on the signal lines.

- Always ensure that PCs or other sensitive electronic devices have a dedicated power circuit.

Cable shielding

Ensure that cable shielding is not damaged during installation and that all cables are properly shielded.

Important:
Be aware that some **third-party** cables and adapters (for example, certain Ethernet cables using RJ45 connectors) are not always shielded. To prevent breaks in cable shielding continuity and potential grounding issues, special attention is required to ensure that any cables, extension cables, adapters, or other signal-coupling devices used in cable runs **maintain all shield connections throughout the cable run**.

8.2 Connections overview

The wind transducer connects to the SeaTalk NG / NMEA 2000 network using the supplied adaptor cable and gateway.

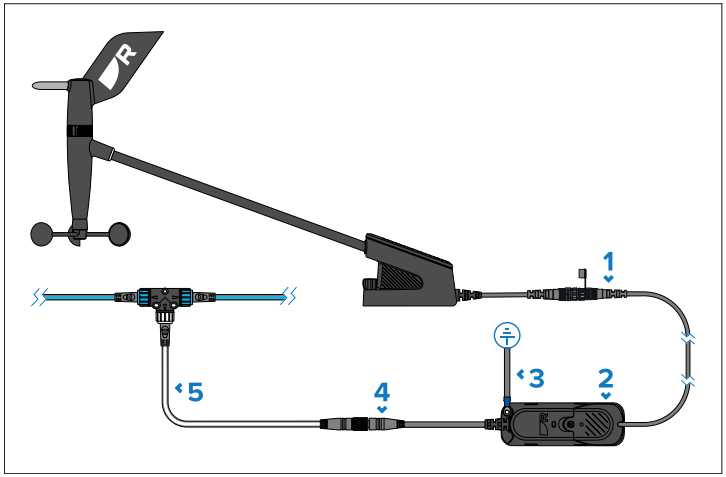

1. **Wind transducer connection** — The wind transducer connects to the supplied mast cable.
2. **Gateway connection** — The wires on the end of the mast cable connect to the matching colored terminals on the gateway.
3. **Gateway ground connection** — The top fixing hole on the gateway connects to the supplied ring crimp terminal to create a ground connection. For more information, refer to: **p.39 — Gateway ground connection**
4. **Gateway DeviceNet connection** — The DeviceNet connector can connect to the supplied SeaTalk NG to DeviceNet adaptor cable, or directly to a DeviceNet spur connection.
5. **SeaTalk NG connection** — The supplied SeaTalk NG to DeviceNet adaptor cable is used to connect the wind transducer system to an available spur connection on the SeaTalk NG network.

8.3 Connecting cables

Follow the steps below to connect the cable(s) to your product.

1. Ensure that the vessel's power supply is switched off.
2. Ensure that the device being connected has been installed in accordance with the installation instructions supplied with that device.
3. Ensuring correct orientation, push cable connectors fully onto the corresponding connectors.
4. Engage any locking mechanism to ensure a secure connection (e.g.: turn locking collars clockwise until tight, or in the locked position).
5. Ensure any bare ended wire connections are suitably insulated to prevent shorting and corrosion due to water ingress.

CHAPTER 9: POWER CONNECTION

CHAPTER CONTENTS

- 9.1 SeaTalk NG power supply (page 32)
- 9.2 SeaTalk NG power cables (page 32)
- 9.3 SeaTalk NG product loading (page 33)
- 9.4 SeaTalk NG power connection point (page 33)
- 9.5 SeaTalk NG system loading (page 33)
- 9.6 Power distribution — SeaTalk NG (page 34)
- 9.7 Power connection via Autopilot Control Unit (ACU-Series) (page 36)

9.1 SeaTalk NG power supply

Your product is supplied power via the SeaTalk NG backbone (or the NMEA 2000 backbone if applicable).

A SeaTalk NG backbone requires a single 12 V dc power supply. Power can be supplied to the SeaTalk NG backbone by one of the following methods:

- (1) Direct connection to a 12 V dc battery using an inline 5 amp fuse.
- Connection to a 12 V dc distribution panel using a 3 amp thermal breaker.
- (2) Connection to the SeaTalk NG connector of an ACU-Series Autopilot Control Unit (not ACU-100 or ACU-150), or an SPX-Series course computer (not SPX-5).
- For 24 V vessels, connection must be via a 5 amp, regulated, continuous 24 V dc to 12 V dc converter.

Note:

• (1) The battery used for starting the vessel's engine(s) should NOT be used to power the SeaTalk NG backbone. If the SeaTalk NG backbone cannot be powered by an alternate power source, products may experience a loss of voltage when the vessel's engine(s) are started.

• (2) The ACU-100, ACU-150 or SPX-5 cannot be used to power the SeaTalk NG backbone.

• The course computer SeaTalk NG connector includes a power switch that must be in the On position to provide power to the backbone.

Inline fuse and thermal breaker ratings

The SeaTalk NG network's power supply requires a suitably-rated inline fuse or thermal breaker to be fitted.

Inline fuse rating	Thermal breaker rating
5A	3A (refer to note below)

Note:
The suitable fuse rating for the thermal breaker is dependent on:

1. How many devices you have connected to your SeaTalk NG network, and;
2. How many devices are sharing the same thermal breaker that your SeaTalk NG network is connected to.

9.2 SeaTalk NG power cables

The following SeaTalk NG power cables can be used to connect the backbone to your chosen **12 V dc** power supply:

Direct connection cables

1. Standard (straight) SeaTalk NG power cable, 2 m (6.6 ft) (part number: **A06049**).
2. Elbow (right-angled) SeaTalk NG power cable, 2 m (6.6 ft) (part number: **A06070**).

Wiring

- **+ Red (positive) wire** — connects to the battery or distribution panel positive terminal. A waterproof fuse holder with 5 A inline fuse (not supplied) must be fitted to this red wire.
- **– Black (negative) wire** — connects to battery or distribution panel negative terminal.
- **Drain wire** — connects to the vessel's RF common ground point (if available), or the battery's negative (-) terminal.

Autopilot Control Unit connection cable

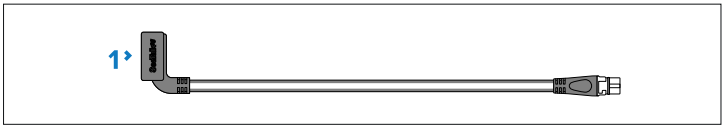

1. ACU-Series/SPX-Series autopilot to SeaTalk NG spur cable, 0.3 m (1.0 ft) (part number **R12112**). Connects the course computer to the SeaTalk NG backbone. This connection can also be used to provide 12 V dc power to the SeaTalk NG backbone.

9.3 SeaTalk NG product loading

The number of products that can be connected to a SeaTalk NG backbone depends on the current draw of each product and the physical length of the backbone cabling.

NMEA 2000 Load Equivalency Numbers (LEN) are used to express the amount of current that is drawn from SeaTalk NG products (**1 LEN = 50 mA**). The LEN for each product can be found in the product's *Technical Specification*.

Products which have a dedicated power supply connection and are connected to the SeaTalk NG backbone will still have an LEN rating. This is because the product's NMEA 2000 / SeaTalk NG internal transceiver will still be powered by the SeaTalk NG backbone.

LENs are used to determine the power connection point for the SeaTalk NG backbone.

9.4 SeaTalk NG power connection point

The point along the backbone where the power connection should be made is based on the length of the backbone.

Note:

- A 12 V dc power supply must be connected to a *white* spur SeaTalk NG connection on the backbone.
- Do NOT connect the power connection to a *blue* SeaTalk NG backbone connector.
- **With the exception of** the iTC-5 and the backbone itself, do NOT connect the power supply directly to a product's *white* SeaTalk NG spur connector.

Small systems

If the backbone length is 60 m (197 ft) or less, the power connection may be made at any point in the backbone.

Large systems

If the backbone length is greater than 60 m (197 ft), the power connection should be made at a point that creates a balanced current draw from each side of the backbone. Load Equivalency Numbers (LEN) are used to determine the power connection point for the system.

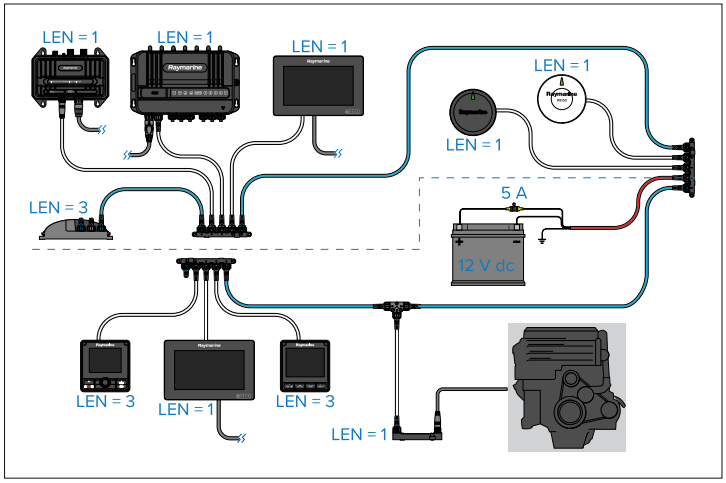

In the example above, the system has an overall LEN of 16, so the optimum connection point would be to have a loading of 8 LEN either side of the connection point.

9.5 SeaTalk NG system loading

The maximum loading (LEN) for a SeaTalk NG system depends on the length of the backbone.

Unbalanced system loading:

- **Backbone Length**: 0 m (0 ft) to 20 m (66 ft) — **Maximum LEN**: 40
- **Backbone Length**: > 20 m (66 ft) to 40 m (131 ft) — **Maximum LEN**: 20
- **Backbone Length**: > 40 m (131 ft) to 60 m (197 ft) — **Maximum LEN**: 14

Balanced system loading:

- **Backbone Length**: 0 m (0 ft) to 60 m (197 ft) — **Maximum LEN**: 100
- **Backbone Length**: > 60 m (197 ft) to 80 m (262 ft) — **Maximum LEN**: 84

- **Backbone Length**: > 80 m (262 ft) to 100 m (328 ft) — **Maximum LEN**: 60
- **Backbone Length**: > 100 m (328 ft) to 120 m (394 ft) — **Maximum LEN**: 50
- **Backbone Length**: > 120 m (394 ft) to 160 m (525 ft) — **Maximum LEN**: 40
- **Backbone Length**: > 160 m (525 ft) to 200 m (656 ft) — **Maximum LEN**: 32

9.6 Power distribution — SeaTalk NG

Recommendations and best practice.

- Only use approved SeaTalk NG power cables. Do NOT use a power cable designed for, or supplied with, a different product.
- See below for more information on implementation for some common power distribution scenarios.

Important:

• When planning and wiring, take into consideration other products in your system, some of which (e.g. sonar modules) may place large power demand peaks on the vessel's electrical system, which may impact the voltage available to other products during the peaks.

• The information provided below is for guidance only, to help protect your product. It covers common vessel power arrangements, but does NOT cover every scenario. If you are unsure how to provide the correct level of protection, please consult an authorized Raymarine dealer or a suitably qualified professional marine electrician.

Implementation — connection to distribution panel (recommended)

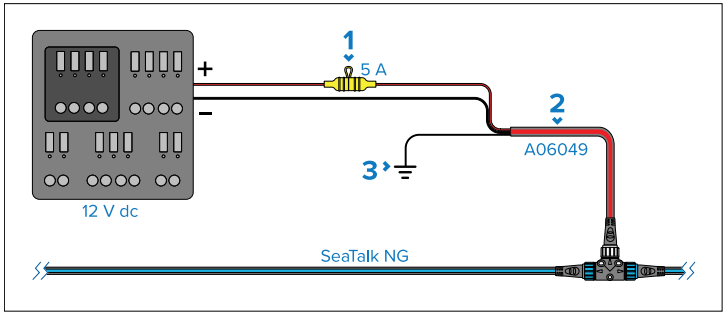

1. Waterproof fuse holder with 5 A inline fuse must be fitted (not supplied).
2. SeaTalk NG power cable.
3. RF Ground connection point for drain wire.

- Ideally, the SeaTalk NG power cable should be connected to a suitable breaker or switch on the vessel's distribution panel or factory-fitted power distribution point. It is recommended that a 5 A inline fuse is fitted to the red (positive) wire of the SeaTalk NG power cable.
- The distribution point should be fed from the vessel's primary power source by 8 AWG (8.36 mm²) cable.
- Ideally, all equipment should be wired to individual suitably-rated thermal breakers or fuses, with appropriate circuit protection. Where this is not possible and more than one item of equipment shares a breaker, use individual in-line fuses for each power circuit to provide the necessary protection.

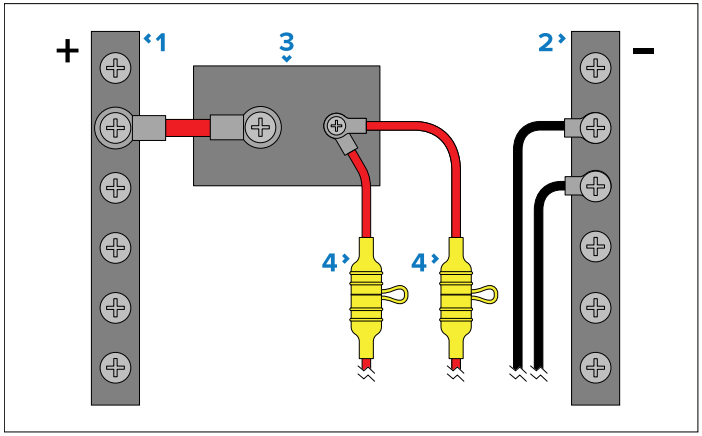

1. Positive (+) bar
2. Negative (-) bar
3. Circuit breaker
4. Waterproof fuse holder with 5 A inline fuse must be fitted (not supplied).

Important:
Observe the recommended fuse / breaker ratings provided in the product's documentation, however be aware that the suitable fuse / breaker rating is dependent on the number of devices being connected.

Implementation — direct connection to battery

- Where connection to a power distribution panel is not possible, the power cable may be connected to the vessel's battery.
- You MUST fit a 5 A inline fuse between the red wire and the battery's positive terminal.
- If you need to extend the length of the power cable, ensure you use suitably rated cable and that sufficient power (12 V dc) is available at the SeaTalk NG backbone's power connection.

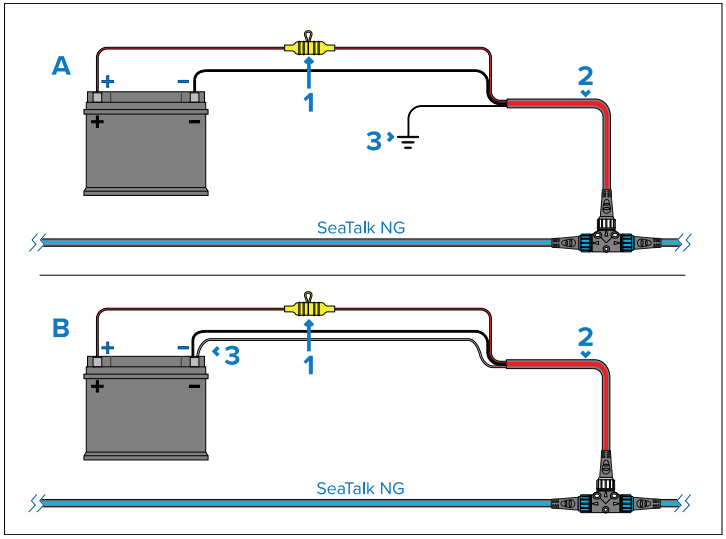

1. Waterproof fuse holder with 5 A inline fuse must be fitted (not supplied).
2. SeaTalk NG power cable.
3. Connection point for drain wire.

Battery connection scenario A:
Suitable for a vessel with a common RF ground point. In this scenario, the power cable's drain wire should be connected to the vessel's common RF ground point.
Battery connection scenario B:
Suitable for a vessel without a common RF ground point. In this scenario the power cable's drain wire should be connected directly to the battery's negative terminal.

SeaTalk NG Power cable extension

If you need to extend the length of the SeaTalk NG power cable, ensure you use suitably-rated cable, and that sufficient power is available at the SeaTalk NG backbone's power connection point:

- For power cable extensions, a **minimum** wire gauge of 16 AWG (1.31 mm^2) is recommended. For cable runs longer than 15 m (49.2 ft), you may need to consider a thicker wire gauge (e.g. 14 AWG (2.08 mm^2), or 12 AWG (3.31 mm^2).

- To ensure power cables (including any extension) are of a sufficient gauge, ensure that there is a continuous **minimum** voltage of **10.8 V dc** at the end of the cable where it enters the product's power connector, even with a fully flat battery at 11 V dc. (Do not assume that a flat battery is at 0 V dc. Due to the discharge profile and internal chemistry of batteries, the current drops much faster than the voltage. A "fully flat" battery still shows a positive voltage, even if it doesn't have enough current to power your device.)

Important:
Be aware that some products in your system (such as sonar modules) can create voltage peaks at certain times, which may impact the voltage available to other products during the peaks.

More information

It is recommended that best practice is observed in all vessel electrical installations, as detailed in the following standards:

- BMEA Code of Practice for Electrical and Electronic Installations in Boats
- NMEA 0400 Installation Standard
- ISO 13297: Small craft — Electrical systems — Alternating and direct current installations
- ISO 10133: Small craft — Electrical systems — Extra-low-voltage d.c. installations
- ABYC E-11 AC & DC Electrical Systems on Boats
- ABYC A-31 Battery chargers and Inverters
- ABYC TE-4 Lightning Protection

Warning: 12 Volt dc only

This product must ONLY be connected to a 12 V dc power source.

Warning: Product grounding

Before applying power to this product, it MUST be correctly grounded, in accordance with the instructions provided.

Warning: Positive ground systems

Do NOT connect this unit to a system which has positive grounding.

9.7 Power connection via Autopilot Control Unit (ACU-Series)

The SeaTalk NG backbone can be supplied 12 V dc power from a compatible Raymarine Autopilot Control Unit (ACU-Series).

Important:
The SeaTalk NG backbone must have a single power supply connection. If your SeaTalk NG backbone is supplied power directly from a battery or distribution panel, then you must ensure that the SeaTalk NG power switch on your ACU-Series is switched Off.

Note:
ACU-100, ACU-150 and SPX-5 autopilot control units cannot supply power to the SeaTalk NG backbone.

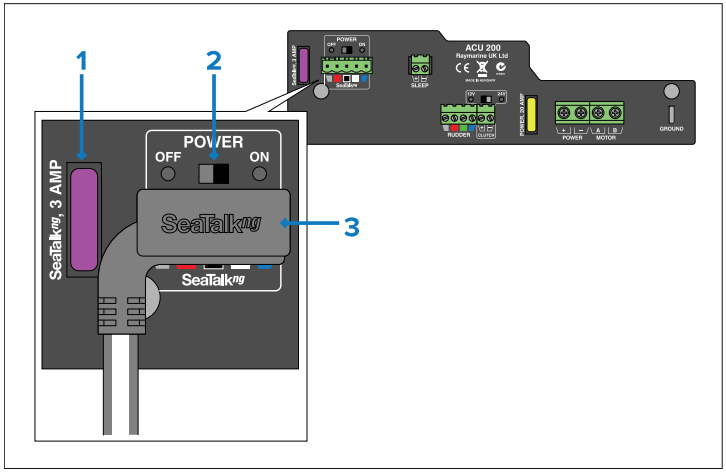

1. Fuse for SeaTalk NG power supply.
2. Power switch for SeaTalk NG power supply:
   a. Select the *[OFF]* position if your SeaTalk NG backbone is supplied power directly from a battery or distribution panel.
   b. Select the *[ON]* position if your SeaTalk NG backbone is supplied power by the ACU-Series.
3. ACU-Series/SPX-Series autopilot to SeaTalk NG spur cable (part number: R12112).

CHAPTER 10: GROUND CONNECTION

CHAPTER CONTENTS

- 10.1 Gateway ground connection (page 39)

10.1 Gateway ground connection

The gateway MUST have a ground connection to the vessel's RF ground point; where no RF ground is available, connect the gateway's ground connection to the vessel's negative (–) battery terminal.

The top fixing hole in the gateway is used for the ground connection point. **There are 3 options for the ground connection**; choose the most appropriate:

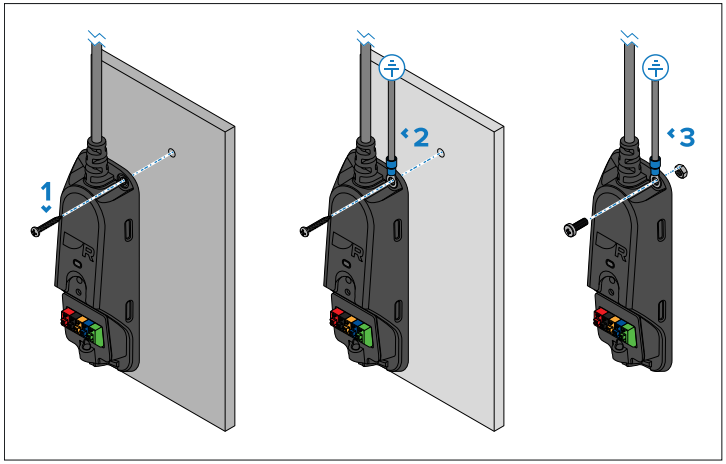

	Mounting scenario	Grounding solution
1	Gateway is mounted on a **metal** surface **which is already grounded**.	The gateway's fixing screw will act as a suitable ground connection.
2	Gateway is mounted on a **non-grounded** surface.	Use the supplied ring crimp terminal and a suitable ground wire (not supplied), connected to the gateway's top fixing hole using the fixing screw.
3	Gateway is **not** being mounted on a surface.	Use the supplied ring crimp terminal and a suitable ground wire (not supplied), connected to the gateway's top fixing hole using an M4 x 10 Machine screw and M4 nut (not supplied).

Ground wire specification

The preferred minimum requirement for the path to ground (bonded or non-bonded) is via a flat tinned copper braid, with a 5 A rating or greater. If this is not possible, an equivalent stranded wire conductor may be used, with the following minimum gauge:

- 1 mm^2 (18 AWG).

In any grounding system, always keep the length of connecting braid or wires as short as possible.

CHAPTER 11: CONNECTIONS

CHAPTER CONTENTS

- 11.1 Connecting the wind transducer (page 41)
- 11.2 Cutting the mast cable (page 41)
- 11.3 Connecting mast cable to the gateway (page 42)
- 11.4 Connecting the gateway to the network (page 43)

11.1 Connecting the wind transducer

Follow the steps below to connect the wind transducer's cable to the connector on the supplied mast cable.

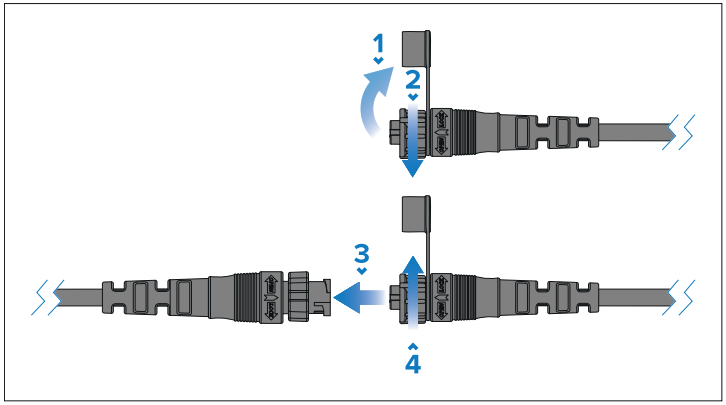

1. Remove the protective cap by pulling it away from the connector.
2. Twist the cable connector's locking collar into the unlocked position.
3. Align the arrows on both connectors and insert the mast cable connector fully into the wind transducer connector.
4. Twist the cable connector's locking collar into the locked position.

The dust cap should remain on the cable so that it can be used to protect the cable connector in the future if the wind transducer has to be removed.

11.2 Cutting the mast cable

Once the mast cable has been fully routed, cut off any excess cable and prepare the wires for connection to the gateway.

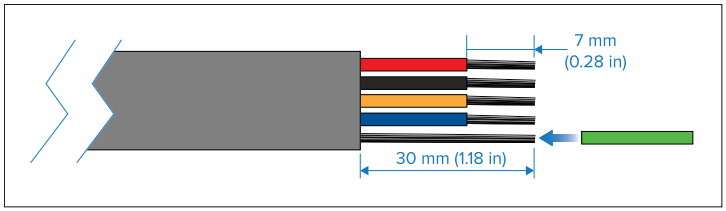

1. Cut the existing mast cable.

   Ensure that sufficient length remains to easily make the connections and remove them again if necessary.
2. Remove 30 mm (1.18 in) of the cable insulation/sheath.
3. Remove 7 mm (0.28 in) of insulation from each wire.
4. Cut the supplied heat shrink tube to an appropriate size (e.g.: 23 mm (0.91 in)), and push all the way along the ground wire (the wire which has no insulation).
5. Re-tin each wire.

11.3 Connecting mast cable to the gateway

The bare-ended wires on the supplied mast cable should be connected to the gateway **after** the mast cable has been routed to the gateway. **The wire connections on the gateway are color-coded to match the mast cable wire colors.**

Important:
The wind transducer must be connected to the network using the supplied gateway and CANNOT be connected to an iTC-5 or an i60 instrument.

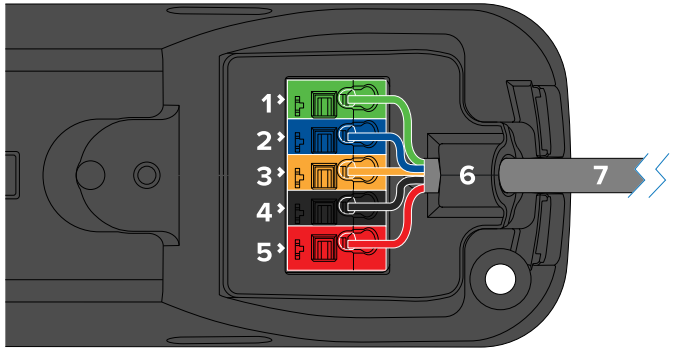

	Terminal color	Wire color	Notes
1	Green	Green	—
2	Blue	Blue	—
3	Yellow	Yellow	—
4	Black	Black	—
5	Red	Red	—
6	—	—	Cable gland
7	—	—	Mast cable

1. Using a screwdriver, press and hold the clamp release button down past the button flush point for the relevant connection terminal.
2. Feed the **matching** colored cable into the terminal's open connection clamp. For further reference, refer to the connection example above.
3. Release the clamp release button.
4. Check that the wire has been correctly clamped into the terminal:

   It's important to pay careful attention to ensure that:

   - *the **stripped** wire (not the sheath) is making contact with the metal terminal;*
   - *there is minimal or no exposed wire showing;*
   - *the **stripped** wire (not the sheath) is retained securely by the terminal. Carefully tug the cable to check this.*
5. Repeat steps 2 to 4 for all wires.
6. Open the cable gland and insert the mast cable sheath so that the mast cable sheath protrudes slightly from the gland.
7. Close the cable gland, ensuring that it clamps the mast cable sheath and not the individual wires.
8. Position the gateway cover's cable cutout groove above the mast cable, and then **push the cover down and forward**. Before engaging the gateway cover clips, ensure that the mast cable is positioned at the top of the cover's cutout groove.

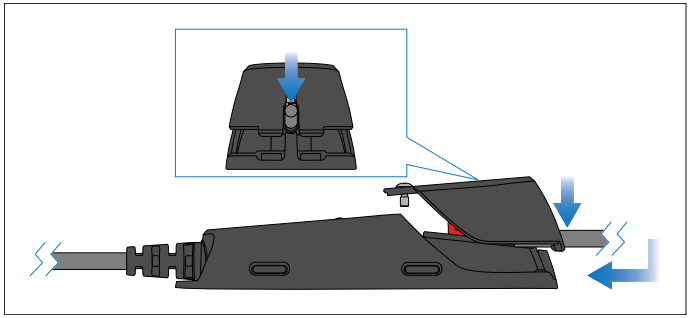

9. Secure the gateway cover by tightening the captive retaining screw until it is secure.

Important:
To prevent water ingress, the gateway's cover MUST be fitted in all installations.

11.4 Connecting the gateway to the network

The gateway must be connected to a SeaTalk NG / NMEA 2000 network.

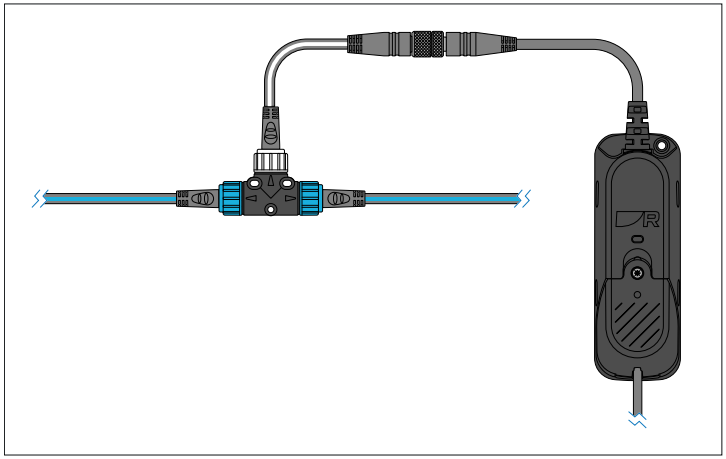

1. Connect the gateway's DeviceNet connector to the DeviceNet connector on the supplied SeaTalk NG to DeviceNet adaptor cable.
2. Connect the SeaTalk NG connector on the supplied SeaTalk NG to DeviceNet adaptor cable to an available spur connection on the SeaTalk NG network.

Alternatively, connect the gateway's DeviceNet connector directly to an available DeviceNet spur on a DeviceNet network.

CHAPTER 12: CONFIGURATION

CHAPTER CONTENTS

- 12.1 RSW-Series wind transducer configuration (page 45)
- 12.2 Configuring RSW-Series wind transducers using LightHouse 4 display (page 45)
- 12.3 Configuring the RSW-Series wind transducer using i70 / i70s instrument display (page 46)
- 12.4 RSW-Series wind transducer internal compass calibration (page 47)

12.1 RSW-Series wind transducer configuration

The RSW-Series wind transducers require configuration to ensure accurate readings are presented.

It is recommended that wind transducers are installed facing directly forwards, inline with the mast centerline. If this is not possible then an angle of the offset from the mast centerline must be configured as follows:

- On a non-rotating mast where a heading sensor is present, the wind transducer will automatically compensate for any offset between installation angle and vessel centerline (heading).
- On a non-rotating mast where no heading sensor is present and the transducer has not been installed facing directly forwards, it is important that an offset is applied to account for the difference between the mast's centerline and the transducer's installation angle.
- On a non-rotating mast, if poor heading sensor readings are affecting wind readings, vessel heading can be ignored. However, an offset must be applied to account for the difference between the vessel's centerline and the transducer's installation angle.
- On a rotating mast a heading sensor is required so that wind readings compensate for mast angle. It is important that an offset is applied to account for the difference between the mast's centerline and the transducer's installation angle. The transducer will automatically compensate for the difference between heading and mast angle.

Non-rotating mast example

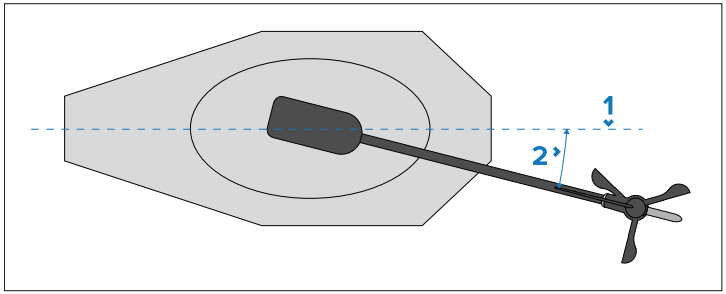

1. Vessel / mast centerline.
2. Offset angle.

Note:
Offset only needs to be entered if there is no heading sensor present on the network.

Rotating mast example

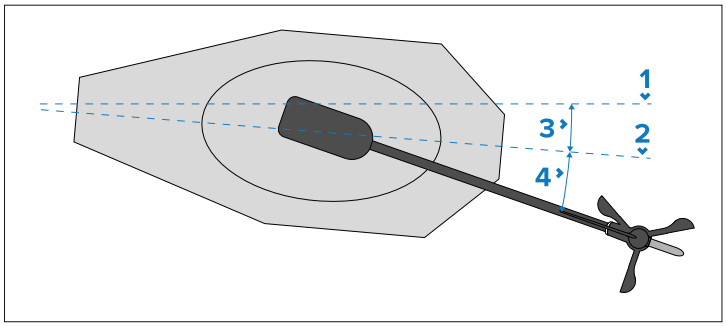

1. Vessel centerline.
2. Mast centerline.
3. Mast rotation.
4. Offset angle.

Note:
A heading sensor and, where applicable, offset angle is required.

12.2 Configuring RSW-Series wind transducers using LightHouse 4 display

The RSW wind transducer can be configured using an Axiom display, running LightHouse 4, version v4.6.103 or later.

The wind transducer configuration is initiated from the *[Network]* settings menu: *[Homescreen > Settings > Network]*

1. Select the *RSW Wired Gateway* from the network list.

2. Select *[Configure settings]* from the Pop-over options.
3. If your vessel has a rotating mast:
   i. Enable the *[Rotating mast]* toggle switch.
   ii. If applicable, enter the offset value for your transducer.

   - *A vessel heading sensor is required for rotating masts.*
   - *The offset should be measured from the mast's centerline to the transducer. This may be different from the vessel centerline.*

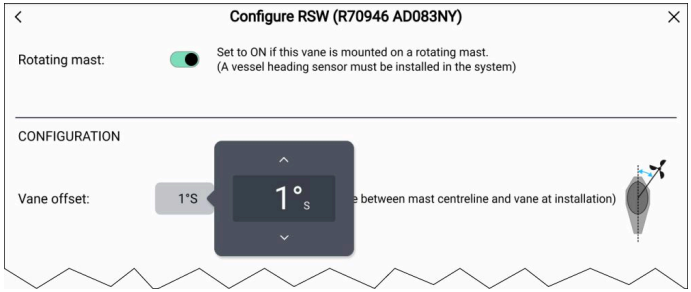

4. If your vessel does not have a rotating mast and does not have a heading sensor; if applicable, enter the offset value for your transducer.

   - *The offset should be measured from the vessel/mast's centerline to the transducer.*

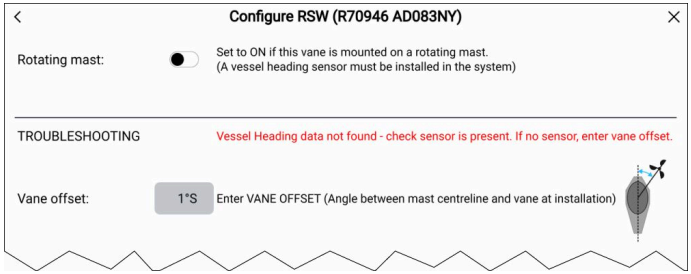

5. If your vessel does not have a rotating mast but does have a heading sensor, no offset value is required. However, if poor heading data is affecting wind data readings you can enable the *[Ignore sensor heading data]* toggle switch and if applicable, enter an offset value for your transducer.

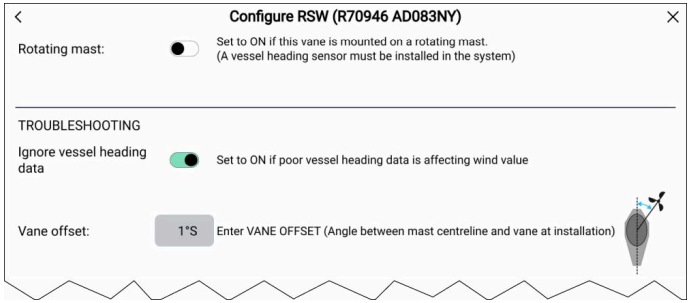

12.3 Configuring the RSW-Series wind transducer using i70 / i70s instrument display

The RSW-Series wind transducers can be configured using an i70 / i70s instrument display, running software version v3.23 or later.

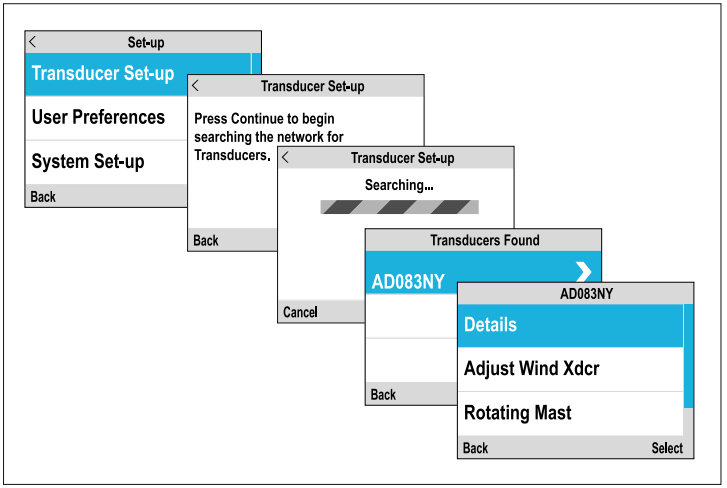

The RSW-Series wind transducer configuration is initiated from the *[Transducer Set-up]* menu: *[Menu > Set-up > Transducer Set-up]*

1. Select *[Continue]* to search for connected transducers.
2. Select your RSW-Series wind transducer from the list.
3. If your vessel has a rotating mast:

i. Select *[Rotating Mast]* and select *[On]*.
ii. If applicable, select *[Adjust Wind Xdcr]* and use the *[Up]* and *[Down]* buttons to enter the offset value for your transducer.

- *A heading sensor is required for rotating masts.*
- *The offset should be measured from the mast's centerline to the transducer. This may be different from the vessel centerline.*

4. If your vessel does not have a rotating mast and does not have a heading sensor; if applicable, select *[Adjust Wind Xdcr]* and use the *[Up]* and *[Down]* buttons to enter the offset value for your transducer.
   - *The offset should be measured from the vessel's / mast's centerline to the transducer.*
5. If your vessel does not have a rotating mast but does have a heading sensor, no offset value is required. However, if poor heading data is affecting wind data readings, you can enable *[Ignore Heading]* and if applicable, use the *[Up]* and *[Down]* buttons to enter the offset value for your transducer from the *[Adjust Wind Xdcr]* menu.

12.4 RSW-Series wind transducer internal compass calibration

The RSW-Series wind transducer's internal compass needs to compensate for local and the Earth's magnetic fields. This is achieved using an automatic process known as linearization.

Initial linearization

When the RSW-Series wind transducer is first installed and powered-up (or after a factory reset or compass reset) the linearization process will start automatically.

Linearization requires no user input.

The time it takes to complete the linearization will vary according to the characteristics of the vessel, the installation environment and the levels of magnetic interference.

You can speed-up the linearization process by completing full 360° turns at a speed of between 3 and 15 knots.

After the initial linearization has completed, the RSW-Series wind transducer will continue to monitor and adapt its calibration to ensure optimum performance in current conditions.

Resetting compass calibration (LightHouse 4)

If significant reading anomalies are experienced the compass calibration process may need to be reset.

From the *[Network]* settings menu: *[Homescreen > Settings > Network]*.

1. Select the RSW wind transducer from the list.

   Ensure you select the wind transducer and not the RSW gateway.
2. Select *[Configuration settings]*.
3. Select the Compass calibration *[Reset]* button.
4. Select *[Yes]*.

The calibration is reset and will start again when the calibration conditions are met.

Resetting compass calibration (i70 / i70s)

If significant reading anomalies are experienced, the compass calibration process may need to be reset.

From the *[Transducer Set-up]* menu: *[Menu > Set-up > Transducer Set-up]*.

1. Select *[Continue]*.
2. Select the RSW-Series wind transducer from the list.
3. Select *[Restart Compass]*.
4. Select *[Yes]*.

The calibration is reset and will start again automatically once the calibration conditions are met.

CHAPTER 13: MAINTENANCE

CHAPTER CONTENTS

- 13.1 Service and maintenance (page 49)

13.1 Service and maintenance

This product contains no user serviceable components. Please refer all maintenance and repair to authorized Raymarine dealers. Unauthorized repair may affect your warranty.

Routine equipment checks

It is recommended that you perform the following routine checks, on a regular basis, to ensure the correct and reliable operation of your equipment:

- Examine all cables for signs of damage or wear and tear.
- Check that all cables are securely connected.

CHAPTER 14: TROUBLESHOOTING

CHAPTER CONTENTS

- 14.1 Troubleshooting (page 51)
- 14.2 Wind data troubleshooting (page 51)
- 14.3 LED diagnostic guidance (page 52)
- 14.4 LED diagnostics (page 52)

14.1 Troubleshooting

The troubleshooting section provides possible causes and the corrective action required for common problems that are associated with the installation and operation of your product.

Before packing and shipping, all products are subjected to comprehensive testing and quality assurance programs. If you do experience problems with your product, this section will help you to diagnose and correct problems to restore normal operation.

If after referring to this section you are still having problems with your product, please refer to the *Technical support and servicing* section of this manual for useful links and contact details.

14.2 Wind data troubleshooting

Note:
Where solutions are provided in numbered steps, follow the steps in order.

Data appears as dashes on display

Possible causes	Possible solutions
Wind data is set to *[True]* wind and there is no Speed Through Water (STW) data available.	1. Set wind data to *[Apparent]* and check for wind data. 2. If wind data appears, and you require True wind instead, check the source of STW data.
Wind transducer connection problem.	1. Check cabling to ensure it is free from damage. 2. Check the cable junction box (usually located at the bottom of the mast) for damage and corrosion, and ensure that connections are clean and secure. Repair and replace as necessary. 3. Check connections to display or converter for damage and corrosion, and ensure that connections are clean and secure. Repair and replace as necessary. 4. Disconnect the wind vane arm and check arm and base connectors for damage and corrosion. Ensure that they are clean and secure, and repair and replace as necessary.

Data appears to be incorrect

Possible causes	Possible solutions
Wind transducer has not been calibrated, or has lost its calibration settings.	1. Re-calibrate the wind transducer. Refer to the operations instructions supplied with your display for calibration procedures.

14.3 LED diagnostic guidance

Your product has diagnostic LEDs which can be used to identify the unit's status and to help troubleshoot any potential issues that may occur.

The following section provides two basic examples of how to interpret the LED diagnostic patterns included in this publication.

Example solid LED diagnostic pattern:

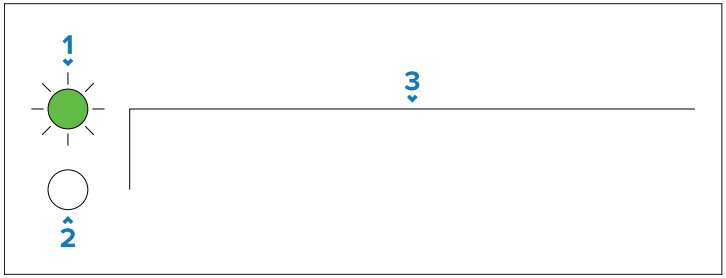

1. **LED ON** — Indicates the color assigned to the unit's diagnostic LED, and confirms that the diagnostic LED is active (switched **on**).
2. **LED OFF** — Indicates that the unit's diagnostic LED is inactive (switched **off**).
3. **Diagnostic pattern** — Indicates a diagnostic pattern based on the number and duration of *peaks* (indicating LED is switched **on**) and *troughs* (indicating LED is switched **off**) generated within the duration of the diagnostic pattern. In the example shown above, a continuous peak occurs, indicating that the LED is permanently **on**.

Example flashing LED diagnostic pattern:

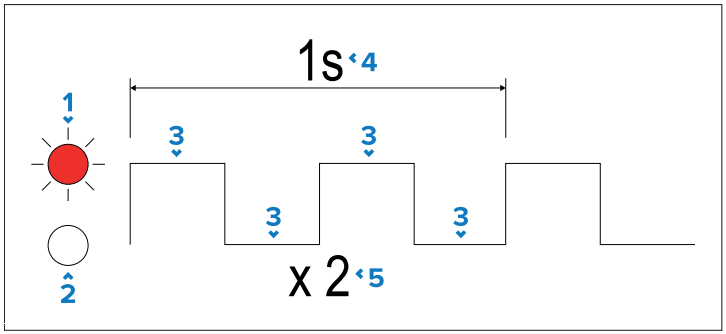

1. **LED ON** — Indicates the color assigned to the unit's diagnostic LED, and confirms that the diagnostic LED is active (switched **on**).
2. **LED OFF** — Indicates that the unit's diagnostic LED is inactive (switched **off**).
3. **Diagnostic pattern** — Indicates a diagnostic pattern based on the number and duration of *peaks* (indicating LED is switched **on**) and *troughs* (indicating LED is switched **off**) generated within the duration of the diagnostic pattern. In the example shown above, a peak followed by a trough occurs and then repeats again, indicating that the LED flashes twice within a period of one second.
4. **Diagnostic pattern duration** — Indicates the total duration of the diagnostic pattern.
5. **Diagnostic pattern flash total** — Indicates the total number of flashes that occur within the diagnostic pattern.

14.4 LED diagnostics

Your wired gateway has diagnostic LEDs on the front of the unit. These LEDs are used to identify the unit's status, and can be used for troubleshooting.

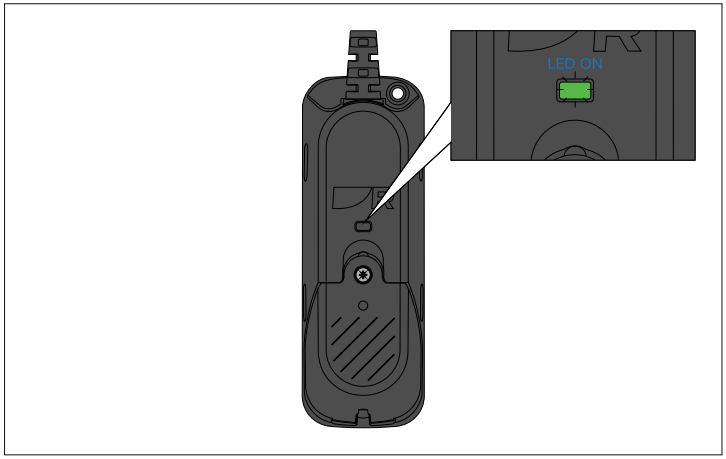

LED indication	LED status and possible solutions
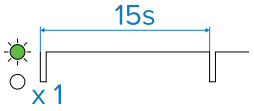	(Green) Powered up / Ok • Normal operation — no user action is required.
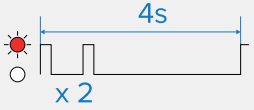	(Red) CAN Fault • Check the relevant product, network cabling and connections for signs of damage or corrosion, and replace if necessary. • Consider contacting your local dealer or Raymarine® Product Support; for contact details, refer to: **p.55 — Raymarine product support and servicing**
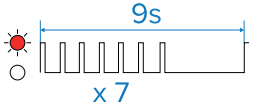	(Red) CAN Failure • Check the relevant product, network cabling and connections for signs of damage or corrosion, and replace if necessary. • Consider contacting your local dealer or Raymarine® Product Support; for contact details, refer to: **p.55 — Raymarine product support and servicing**
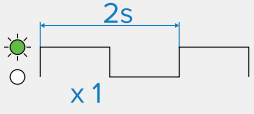	(Green) No wind vane connected • Refer to the advice found within the following section: **p.40 — Connections** • Check the relevant product, network cabling and connections for signs of damage or corrosion, and replace if necessary.

LED indication	LED status and possible solutions
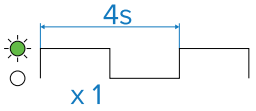	(Green) Wind vane / Gateway updating • Normal operation — no user action is required.
	(No color) No power 1. Check the vessel's battery voltage, the condition of the battery terminals and power supply cables, ensuring connections are secure, clean and free from corrosion; replace if necessary. 2. Check the power supply cable and connectors for signs of damage or corrosion; replace if necessary. 3. Check that the power cable connector is fully inserted into the unit and locked in position. 4. With the unit turned on, try flexing the power cable near to the connector to see if this causes the unit to re-start/lose power; replace if necessary. 5. With the product under load, using a multi-meter, check for high voltage drop across all connectors / fuses etc, and replace if necessary.

CHAPTER 15: TECHNICAL SUPPORT

CHAPTER CONTENTS

- 15.1 Raymarine technical support and servicing (page 55)
- 15.2 Learning resources (page 57)

15.1 Raymarine technical support and servicing

Raymarine provides a comprehensive product support service, as well as warranty, service, and repairs. You can access these services through the Raymarine website, telephone, and e-mail.

Product information

If you need to request service or support, please have the following information to hand:

- Product name.
- Product identity.
- Serial number.
- Software application version.
- System diagrams.

Servicing and warranty

Raymarine offers dedicated service departments for warranty, service, and repairs.
Visit the Raymarine website to **read the latest warranty policy**, and **register** your product's warranty online:

- www.bit.ly/rym-warranty

United Kingdom (UK), EMEA, and Asia Pacific:

- Web: www.bit.ly/rym-service
- Tel: +44 (0)1329 246 932

United States (US):

- Web: www.bit.ly/rym-service
- Tel: +1 (603) 324 7900

Web support

Please visit the "Support" area of the Raymarine website for:

- **Manuals and Documents** — www.bit.ly/rym-docs
- **Technical support forum** — www.bit.ly/rym-support
- **Software updates** — www.bit.ly/rym-software

Telephone and online support

Region	Contact details
All regions	**Online support:** www.bit.ly/rym-support
United Kingdom (UK) and EMEA	**Telephone:** +44 (0)1329 246 777 **Address:** Marine House, Cartwright Drive, Fareham, PO15 5RJ, UK.
United States (US)	**Telephone:** Tel: +1 (603) 324 7900 (Toll-free: +800 539 5539) **Address:** 110 Lowell Road, Hudson, NH 03051, USA.
Australia and New Zealand (Raymarine subsidiary)	**Telephone:** +61 2 8977 0300 **Address:** Suite 1.01, 26 Rodborough Road, Frenchs Forest, NSW, 2086, Australia.
France (Raymarine subsidiary)	**Telephone:** +33 (0)1 46 49 72 30 **Address:** 35 avenue Michel Crépeau, 17000 La Rochelle - France.
Germany (Raymarine subsidiary)	**Telephone:** +49 40 237 808 0 **Address:** Atlantic-Haus, Zirkusweg 1, 20359 Hamburg.
Italy (Raymarine subsidiary)	**Telephone:** +39 02 9945 1001 **Address:** Via L. Manara 2, 20812 Limbiate (MB), Italy.
Spain (Authorized Raymarine distributor)	**Telephone:** +34 96 2965 102 **Email:** sat@azimut.es
Netherlands / Benelux (Authorized Raymarine distributor)	**Telephone:** +31 (0)26 3614 905 **Address:** Florijnweg 21G, 6883 JN VELP, Nederland.

Region	Contact details
Sweden (Raymarine subsidiary)	**Telephone:** +46 (0)317 633 670 **Address:** Bolshedens Industriväg 18, 427 50 Billdal, Sweden.
Finland (Raymarine subsidiary)	**Telephone:** +358 (0)207 619 937 **Address:** Suomalaistentie 1-3, 02270 Espoo, Finland.
Norway (Raymarine subsidiary)	**Telephone:** +47 692 64 600 **Address:** Årvollskogen 30, 1529 Moss, Norway.
Denmark (Raymarine subsidiary)	**Telephone:** +45 437 164 64 **Address:** Centervej 7, 4600 Køge, Denmark.
Russia (Distributor)	**Telephone:** Tel: +7 495 788 0508 **Email:** info@mikstmarine.ru

Viewing product information

Use the *[Settings]* menu to view hardware and software information about your display, and connected products.

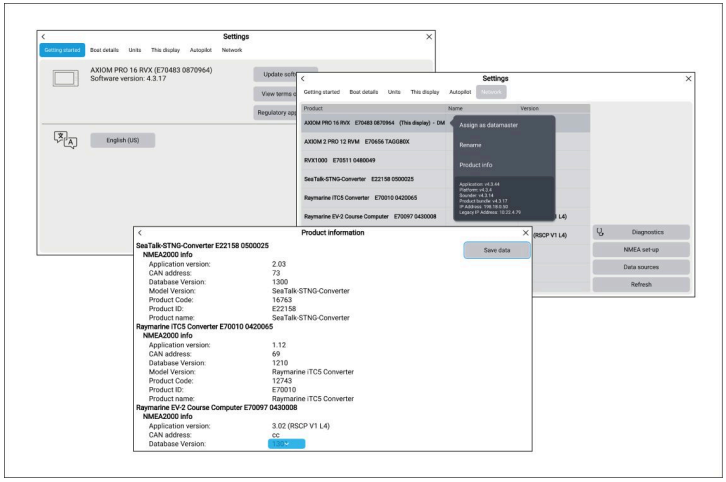

1. Select *[Settings]*, from the Homescreen.

   The *[Getting started]* menu contains hardware and software information for your display.

2. You can view further information about your display, or view information about products networked using SeaTalk HS and SeaTalk NG / NMEA 2000, by selecting the *[Network]* tab, then:
   i. to display detailed software information and your display's network IP address, select your display from the list.
   ii. to display detailed diagnostics information for all products, select *[Product info]* from the *[Diagnostics]* pop over menu.

Remote Support via AnyDesk

LightHouse 3 software versions v3.13 or later support remote support functions via the preloaded AnyDesk app.

The AnyDesk app enables a Raymarine Product Support representative to remotely connect to and control your display over an Internet connection, for the purposes of technical support and troubleshooting.

To get started, you will first need to contact Raymarine Product Support. If the representative considers that your support case would benefit from a remote session, you need to first ensure that

your display has an active Internet connection via Wi-Fi. Next, launch the AnyDesk app from your display's homescreen, and then provide the displayed unique ID to the Raymarine Product Support representative. Then follow any further instructions provided to you by the representative.

Attention

- **AnyDesk is provided for troubleshooting and support purposes only, and is NOT intended to perform remote functions on your vessel. Raymarine will NOT be held liable for damage or injury to equipment or persons caused by the use of a remote connection to your display.**
- **Do not disclose your AnyDesk ID to anyone other than authorized Raymarine Product Support personnel.**
- **Do not use the AnyDesk app to remotely activate connected devices such as Autopilot, Radar or Sonar hardware.**

15.2 Learning resources

Raymarine has produced a range of learning resources to help you get the most out of your products.

Video tutorials

Raymarine official channel on YouTube

- http://www.youtube.com/user/RaymarineInc

Training courses

Raymarine regularly runs a range of in-depth training courses to help you make the most of your products. Visit the Training section of the Raymarine website for more information:

- www.bit.ly/rym-training

Technical support forum

You can use the Technical support forum to ask a technical question about a Raymarine product or to find out how other customers are using their Raymarine equipment. The resource is regularly updated with contributions from Raymarine customers and staff:

- www.bit.ly/rym-support

CHAPTER 16: TECHNICAL SPECIFICATION

CHAPTER CONTENTS

- 16.1 Physical specification (page 59)
- 16.2 Power specification (page 59)
- 16.3 Environmental specification (page 59)
- 16.4 Conformance specification (page 59)

16.1 Physical specification

Specification	
Length:	• Wind transducer (including cable): 657.76 mm (25.90 in) • Wind transducer (excluding cable): 540.71 mm (21.29 in) • Wired gateway: 155.61 mm (6.13 in)
Width:	• Wind transducer: 46.96 mm (1.85 in) • Wired gateway: 47.83 mm (1.88 in)
Height:	• Wind transducer: 305.86 mm (12.04 in) • Wired gateway: 30.61 mm (1.21 in)
Weight:	• Wind transducer: 0.34 kg (0.75 lbs) • Wired gateway (excluding mast cable): 0.14 kg (0.31 lbs) • Wired gateway (including mast cable): 0.98 kg (2.16 lbs)

16.2 Power specification

Specification	
Nominal supply voltage:	12 V dc (via SeaTalk ng)
Operating voltage range:	9 V to 16 V dc
Power consumption:	<100 mW
Inline fuse rating:	Ensure that the SeaTalk ng backbone is protected by a 5 A fuse.
Thermal breaker rating:	3 A
NMEA 2000 LEN (Load Equivalency Number) — based on nominal 9 V rating:	1

16.3 Environmental specification

Specification	
Operating temperature range:	-25°C to +55°C (-13°F to +131°F)
Storage temperature range:	-30°C to +70°C (-22°F to +158°F)
Relative Humidity:	• Masthead: 100% • Below deck: up to 93% @ 40°C
Waterproof rating:	• Wind transducer: IPx6, IPx7 • Wired gateway: IPx4
Wind:	115 mph (185 kph)
Vibration:	• EN 60945:2002 (exposed) • ISO 10055
Salt Mist:	IEC 60945

16.4 Conformance specification

Specification	
Europe, Australia & New Zealand:	EN 60945:2002
Canada:	ICES-003
USA:	CFR47 Part 15
Japan / China:	IACS section E10
Product markings:	• UKCA • CE • Australian Tick • WEEE Directive • Industry Canada

CHAPTER 17: SPARES AND ACCESSORIES

CHAPTER CONTENTS

- 17.1 Spares (page 61)
- 17.2 GNSS (GPS) receiver accessories (page 61)
- 17.3 Heading sensor accessories (page 62)
- 17.4 Transducer accessories (page 62)
- 17.5 SeaTalk NG cables and accessories (page 63)

17.1 Spares

The following spares are available for your RSW-Wired transducer.

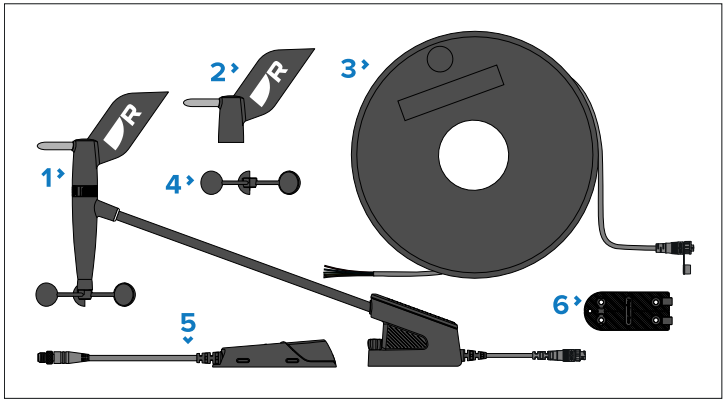

	Part	Description
1	R70941	RSW-Wired wind transducer
2	R70948	Replacement vane
3	R70944 R70945	30 m (98.43 ft) mast cable 50 m (164.04 ft) mast cable
4	R70949	Replacement cups
5	R70946	RSW-Wired wind gateway
6	R70950	Wind transducer mounting plate

17.2 GNSS (GPS) receiver accessories

The following Raymarine GNSS (GPS) receivers can be used in conjunction with the wind transducer to output Ground wind data.

GNSS (GPS) Receivers:

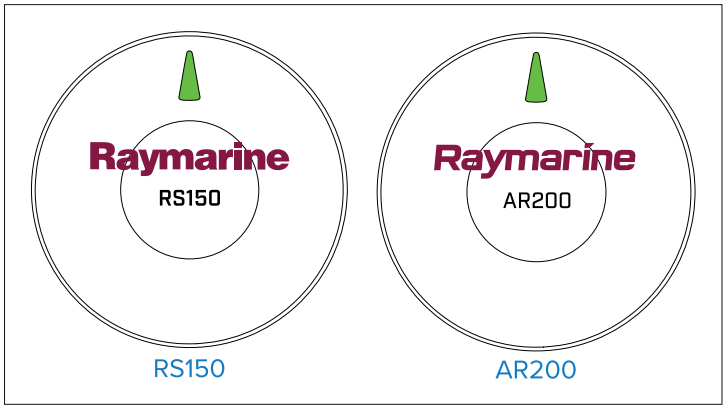

Part	Description
E70310	RS150 GNSS (GPS) receiver.
E70537	AR200 sensor (includes a GNSS (GPS) receiver).

17.3 Heading sensor accessories

The following Raymarine heading sensors can be used in conjunction with the wind transducer to output Mast rotation angle data.

Heading sensors:

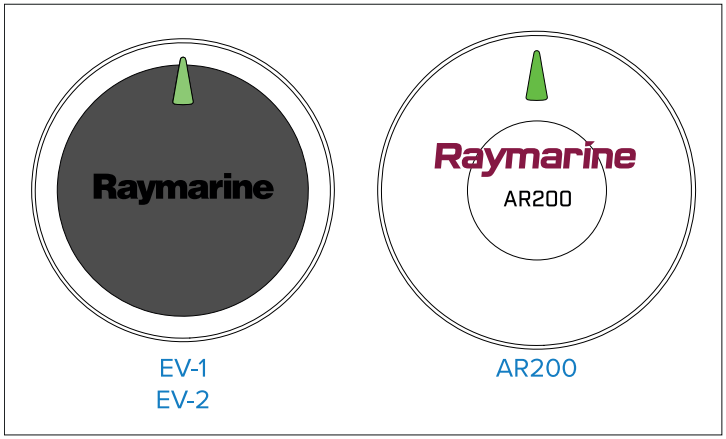

Part	Description
E70096	EV-1 Sensor.
E70097	EV-2 Sensor.
E70537	AR200 Sensor.

17.4 Transducer accessories

The following Raymarine speed transducers can be used in conjunction with the wind transducer to output accurate sailing wind and back-calculated Apparent Wind data.

Depth, Speed and Temperature (DST) transducers:

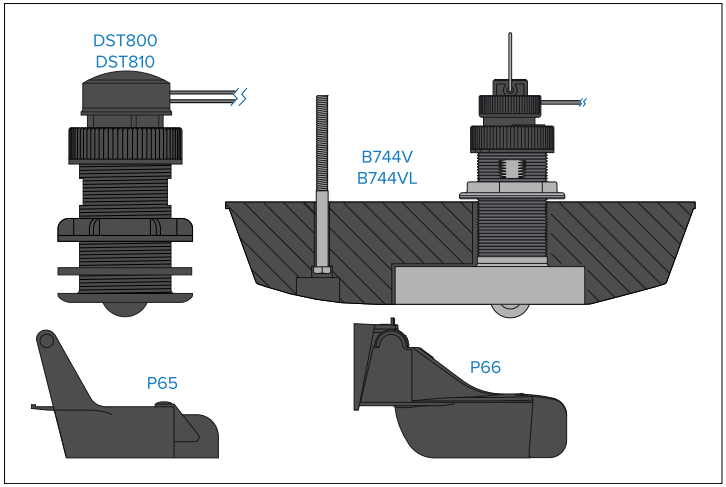

Part	Description
E70617 / E70667	DST810-0° Thru-Hull
A22146	DST800 Bronze Thru-Hull
A80375 / A22154	DST800 Plastic Thru-Hull (replaces A22111)
A26043	B744V (including fairing block) Thru-hull
A26044	B744VL (including fairing block) Thru-hull
E26028-PZ	P66 Transom mount
E26006-PZ	P65 / ST40 Transom mount

Speed and Temperature transducers:

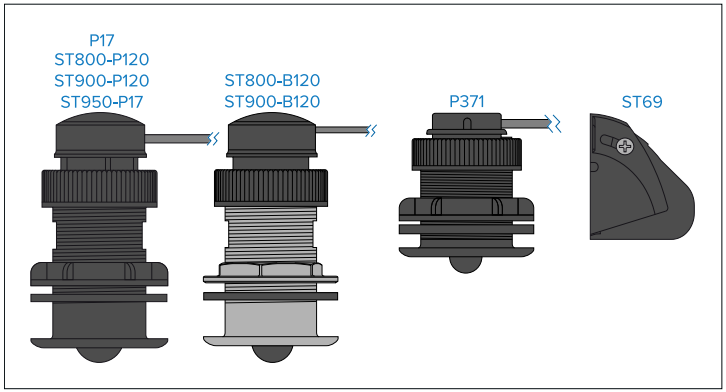

Part	Description
E25025	P17 Thru-hull
E26031	ST800-P120 Thru-hull.
E70673	ST900-P120 Thru-hull, with 13.7 m (44.95 ft) fitted cable.
E70674	ST900-P120 Thru-hull, with 20 m (65.62 ft) fitted cable.
E66072	ST800-B120 Thru-hull.
E70686	ST900-B120 Thru-hull, with 13.7 m (44.95 ft) fitted cable.
E70687	ST950-P17 Thru-hull, with 6 m (19.69 ft) fitted cable.
E26008	P371 Thru-hull.
E26005	ST69 Transom mount.

17.5 SeaTalk NG cables and accessories

SeaTalk NG cables and accessories for use with compatible products.

SeaTalk NG kits

SeaTalk NG kits enable you to create a simple SeaTalk NG backbone. **Starter kit (part number: T70134)** consists of:

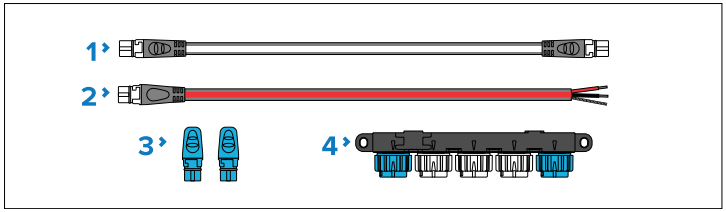

1. 1 x Spur cable 3 m (9.8 ft) (part number: **A06040**). Used to connect device to the SeaTalk NG backbone.
2. 1 x Power cable 2 m (6.6 ft) (part number: **A06049**). Used to provide 12 V dc power to the SeaTalk NG backbone.
3. 2 x Backbone terminators (part number: **A06031**). Terminators must be fitted to both ends of the SeaTalk NG backbone.
4. 1 x 5-Way connector (part number: **A06064**). Each connector block allows connection of up to 3 SeaTalk NG devices. Multiple connector blocks can be 'daisy chained' together.

Backbone kit (part number: A25062) consists of:

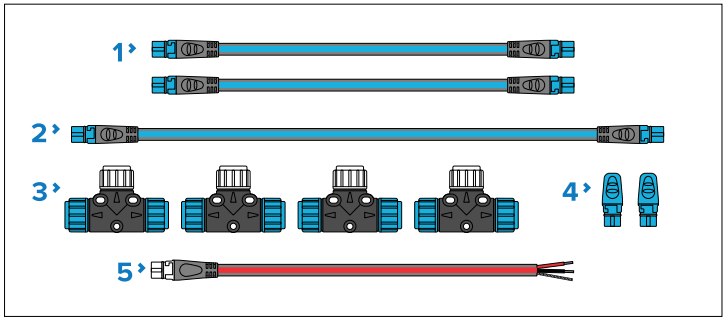

1. 2 x Backbone cables 5 m (16.4 ft) (part number: **A06036**). Used to create and extend the SeaTalk NG backbone.

2. 1 x Backbone cable 20 m (65.6 ft) (part number: **A06037**). Used to create and extend the SeaTalk NG backbone.
3. 4 x T-piece (part number: **A06028**). Each T-piece allows connection of one SeaTalk NG device. Multiple T-pieces can be 'daisy chained' together.
4. 2 x Backbone terminators (part number: **A06031**). Terminators must be fitted to both ends of the SeaTalk NG backbone.
5. 1 x Power cable 2 m (6.6 ft) (part number: **A06049**). Used to provide 12 V dc power to the SeaTalk NG backbone.

Evolution-Series autopilot cable kit (part number: R70160) consists of:

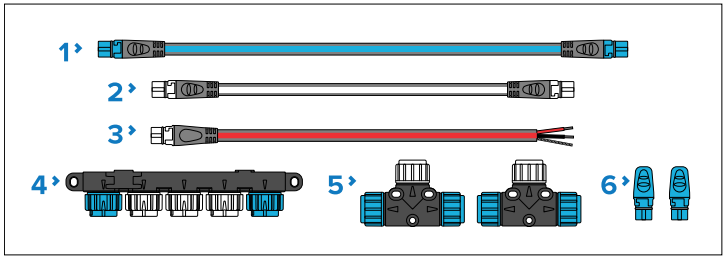

1. 1 x Backbone cable 5 m (16.4 ft) (part number: **A06036**). Used to create and extend the SeaTalk NG backbone.
2. 1 x Spur cable 1 m (3.3 ft) (part number: **A06040**). Used to connect device to the SeaTalk NG backbone.
3. 1 x Power cable 2 m (6.6 ft) (part number: **A06049**). Used to provide 12 V dc power to the SeaTalk NG backbone.
4. 1 x 5-Way connector (part number: **A06064**). Each connector block allows connection of up to 3 SeaTalk NG devices. Multiple connector blocks can be 'daisy chained' together.
5. 2 x T-pieces (part number: **A06028**). Each T-piece allows connection of one SeaTalk NG device. Multiple T-pieces can be 'daisy chained' together.
6. 2 x Backbone terminators (part number: **A06031**). Terminators must be fitted to both ends of the SeaTalk NG backbone.

SeaTalk 1 to SeaTalk NG converter kit (part number: E22158) consists of:

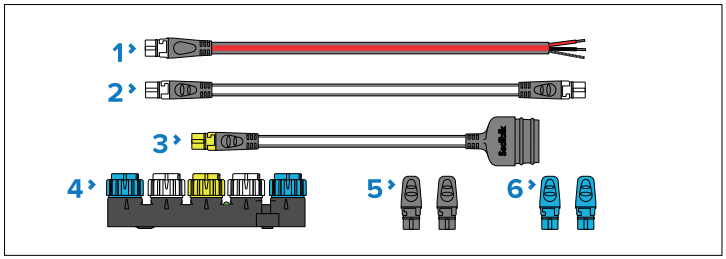

1. 1 x Power cable 2 m (6.6 ft) (part number: **A06049**). Used to provide 12 V dc power to the SeaTalk NG backbone.
2. 1 x Spur cable 1 m (3.3 ft) (part number: **A06039**). Used to connect a device to the SeaTalk NG backbone.
3. 1 x SeaTalk 1 (3 pin) to SeaTalk NG adapter cable 0.4 m (1.3 ft) (part number: **A22164**). Used to connect SeaTalk 1 devices to the SeaTalk NG backbone via the SeaTalk 1 to SeaTalk NG converter.
4. 1 x SeaTalk 1 to SeaTalk NG converter (part number: **E22158**). Each converter allows connection of one SeaTalk 1 device and up to 2 SeaTalk NG devices.
5. 2 x Spur blanking plugs (part number: **A06032**). Used to cover unused spur connections in 5-way blocks, T-piece connectors and SeaTalk 1 to SeaTalk NG converter.
6. 2 x Backbone terminators (part number: **A06031**). Terminators must be fitted to both ends of the SeaTalk NG backbone.

NMEA 0183 VHF 2-wire to SeaTalk NG converter kit (part number: E70196) consists of:

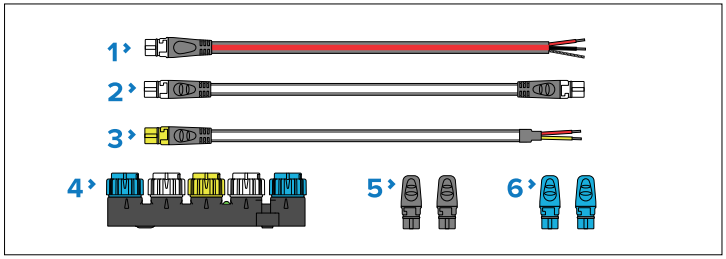

1. 1 x Power cable 2 m (6.6 ft) (part number: **A06049**). Used to provide 12 V dc power to the SeaTalk NG backbone.
2. 1 x Spur cable 1 m (3.3 ft) (part number: **A06039**). Used to connect a device to the SeaTalk NG backbone.

3. 1 x NMEA 0183 VHF stripped-end (2-wire) to SeaTalk NG adapter cable 1 m (3.3 ft) (part number: **A06071**). Used to connect an NMEA 0183 VHF radio to the SeaTalk NG backbone via the NMEA 0183 to SeaTalk NG converter.
4. 1 x SeaTalk 1 to SeaTalk NG converter (part number: **E22158**). Each converter allows connection of one SeaTalk 1 device and up to 2 SeaTalk NG devices.
5. 2 x Spur blanking plugs (part number: **A06032**). Used to cover unused spur connections in 5-way blocks, T-piece connectors, and the SeaTalk 1 to SeaTalk NG converter.
6. 2 x Backbone terminators (part number: **A06031**). Terminators must be fitted to both ends of the SeaTalk NG backbone.

SeaTalk NG spur cables
SeaTalk NG spur cables are required to connect devices to the SeaTalk NG backbone.

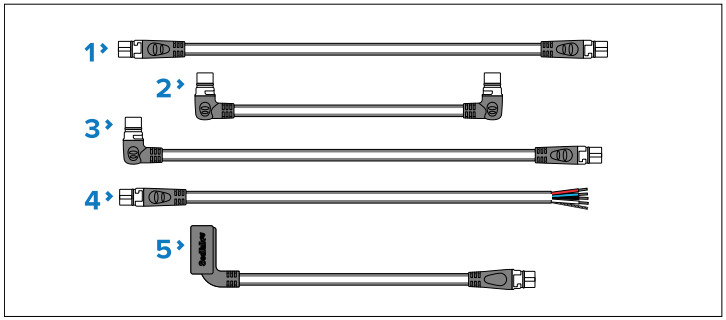

1. SeaTalk NG spur cables:
   - Spur cable 0.4 m (1.3 ft) (part number: **A06038**).
   - Spur cable 1 m (3.3 ft) (part number: **A06039**).
   - Spur cable 3 m (9.8 ft) (part number: **A06040**).
   - Spur cable 5 m (16.4 ft) (part number: **A06041**).
2. Elbow (right-angled) to elbow (right-angled) spur cable 0.4 m (1.3 ft) (part number: **A06042**). Used in confined spaces where a straight spur cable will not fit.
3. Elbow (right-angled) to straight spur cable 1 m (3.3 ft) (part number: **A06081**). Used in confined spaces where a straight spur cable will not fit.
4. SeaTalk NG to stripped-end spur cables (connects compatible products that do not have a SeaTalk NG connector, such as transducer pods):
   - SeaTalk NG to stripped-end spur cable 1 m (3.3 ft) (part number: **A06043**)
   - SeaTalk NG to stripped-end spur cable 3 m (9.8 ft) (part number: **A06044**)
5. ACU-200 / ACU-300 / ACU-400 / SPX-Series autopilot to SeaTalk NG spur cable 0.3 m (1.0 ft) (part number **R12112**). Connects the course computer to the SeaTalk NG backbone. This connection can also be used to provide 12 V dc power to the SeaTalk NG backbone.

SeaTalk NG backbone cables
SeaTalk NG backbone cables are used to create or extend a SeaTalk NG backbone.

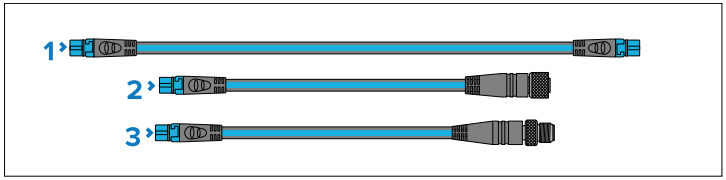

1. Backbone cables:
   - Backbone cable 0.4 m (1.3 ft) (part number: **A06033**).
   - Backbone cable 1 m (3.3 ft) (part number: **A06034**).
   - Backbone cable 3 m (9.8 ft) (part number: **A06035**).
   - Backbone cable 5 m (16.4 ft) (part number: **A06036**).
   - Backbone cable 9 m (29.5 ft) (part number: **A06068**).
   - Backbone cable 20 m (65.6 ft) (part number: **A06037**).
2. SeaTalk NG to DeviceNet (female) Backbone cable 0.4 m (1.3 ft) (part number: **A80675**)
3. SeaTalk NG to DeviceNet (male) Backbone cable 0.4 m (1.3 ft) (part number: **A80674**)

SeaTalk NG power cables
SeaTalk NG power cables are used to provide the SeaTalk NG backbone with a single 12 V dc power source. The power connection must include a 5 amp inline fuse (not supplied).

1. Power cable (straight) 2 m (6.6 ft) (part number: **A06049**).
2. Elbow (right-angled) power cable 2 m (6.6 ft) (part number: **A06070**).

SeaTalk NG connectors

SeaTalk NG connectors are used to connect SeaTalk NG devices to the SeaTalk NG backbone and to create and extend the backbone.

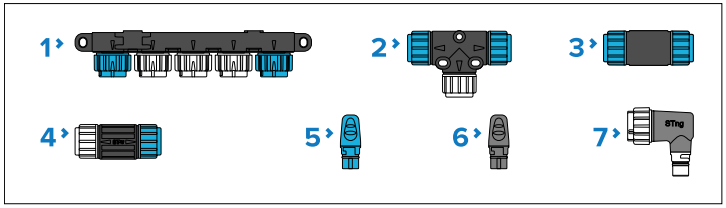

1. 5-Way connector (part number: **A06064**). Each connector block allows connection of up to 3 SeaTalk NG devices. Multiple connector blocks can be 'daisy chained' together.
2. T-piece (part number: **A06028**). Each T-piece allows connection of one SeaTalk NG device. Multiple T-pieces can be 'daisy chained' together.
3. Backbone extender (part number: **A06030**). Used to connect 2 backbone cables together.
4. Inline terminator (part number: **A80001**). Used to connect a spur cable and SeaTalk NG device at the end of a backbone instead of a backbone terminator.
5. Backbone terminator (part number: **A06031**). Terminators must be fitted to both ends of the SeaTalk NG backbone.
6. Spur blanking plug (part number: **A06032**). Used to cover unused spur connections in 5-Way blocks, T-piece connectors, or the SeaTalk 1 to SeaTalk NG converter.
7. Elbow (right-angled) spur connector (part number: **A06077**). Used in confined spaces where a straight spur cable will not fit.

SeaTalk NG adaptors and adaptor cables

SeaTalk NG adaptor cables are used to connect devices designed for different CAN Bus backbones (e.g.: SeaTalk 1 or DeviceNet) to the SeaTalk NG backbone.

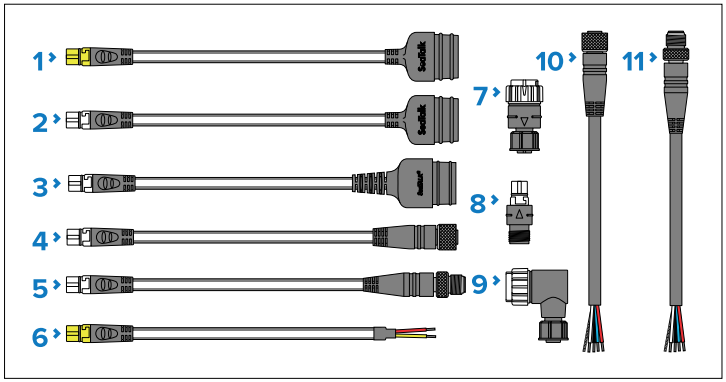

1. SeaTalk 1 (3 pin) to SeaTalk NG converter cable 1 m (3.3 ft) (part number: **A22164 / A06073**). Can be used to connect a SeaTalk 1 device to a SeaTalk NG backbone via the SeaTalk 1 to SeaTalk NG converter, or to connect a SeaTalk NG product directly to a SeaTalk 1 network.
2. SeaTalk 1 (3 pin) to SeaTalk NG adaptor cable 0.4 m (1.3 ft) (part number: **A06047**). Can be used to connect a SeaTalk 1 device to a SeaTalk NG backbone via the SeaTalk 1 to SeaTalk NG converter, or to connect a SeaTalk NG product directly to a SeaTalk 1 network.
3. SeaTalk 2 (5 pin) to SeaTalk NG adaptor cable 0.4 m (1.3 ft) (part number: **A06048**). Used to connect SeaTalk 2 devices or networks to a SeaTalk NG backbone.
4. SeaTalk NG to DeviceNet (female) adaptor cables connect NMEA 2000 devices that use a DeviceNet connector to the SeaTalk NG backbone, or connects SeaTalk NG devices to an NMEA 2000 network. The following cables are available:
   - SeaTalk NG to DeviceNet (female) adaptor cable 0.4 m (1.3 ft) (part number: **A06045**).
   - SeaTalk NG to DeviceNet (female) adaptor cable 1 m (3.3 ft) (part number: **A06075**).
5. SeaTalk NG to DeviceNet (male) adaptor cables. Connect NMEA 2000 devices that use a DeviceNet connector to the SeaTalk NG

backbone, or connect SeaTalk NG devices to an NMEA 2000 network. The following cables are available:

- SeaTalk NG to DeviceNet (male) adaptor cable 0.1 m (0.33 ft) (part number: **A06078**).
- SeaTalk NG to DeviceNet (male) adaptor cable 0.4 m (1.3 ft) (part number: **A06074**).
- SeaTalk NG to DeviceNet (male) adaptor cable 1 m (3.3 ft) (part number: **A06076**).
- SeaTalk NG to DeviceNet (male) adaptor cable 1.5 m (4.92 ft) (part number: **A06046**).

6. NMEA 0183 stripped-end (2-wire) to SeaTalk NG adapter cable 1 m (3.3 ft) (part number: **A06071**). Used to connect an NMEA 0183 VHF radio to the SeaTalk NG backbone via the NMEA 0183 to SeaTalk NG converter.
7. SeaTalk NG (male) to DeviceNet (female) adaptor (**A06082***).
8. SeaTalk NG (female) to DeviceNet (male) adaptor (**A06083***).
9. SeaTalk NG (male) to DeviceNet (female) elbow (right-angled) adaptor (**A06084***).
10. DeviceNet (female) to stripped-end adaptor cable (0.4 m (1.3 ft)) (part number: **E05026**).
11. DeviceNet (male) to stripped-end adaptor cable (0.4 m (1.3 ft)) (part number: **E05027**).

Important:
* Do NOT connect the A06082, A06083, or A06084 adaptors directly to a backbone. Only connect as part of a **spur** connection between backbone and device.

Appendix A Software release history

The list below is a cumulative list of the new features introduced in subsequent releases of the RSW-Wired and Wired gateway software, since the initial release (RSW-Wired: v1.06 / Wired gateway: v1.03).

This list includes *new features* only. It does NOT include software maintenance items, such as bug fixes or performance improvements.
To download the software, and view the complete list of all software updates, including new features, bug fixes, and performance improvements, visit:

M300-Series software download link
www.bit.ly/rsw-wired-download

RSW-Wired: v1.07 / Wired gateway: v1.06 new features:
(Software release date: *February 2025*)

- Maintenance release.

RSW-Wired: v1.07 / Wired gateway: v1.04 new features:
(Software release date: *October 2024*)

- Maintenance release.

RSW-Wired: v1.06 / Wired gateway: v1.03 new features:
(Software release date: *July 2024*)

- Initial public release.

Appendix B Supported NMEA 2000 PGNs

Supported standard NMEA 2000 PGNs are listed below. Raymarine and other proprietary PGNs are not listed.

Note:
Support for some PGNs may be restricted to a specific application.

Administration PGNs

- **59392** — ISO Acknowledge (Receive / Transmit)
- **59904** — ISO Request (Receive / Transmit)
- **60160** — ISO Transport Protocol, Data Transfer (Receive)
- **60416** — ISO Transport Protocol, Connection Management — BAM Group Function (Receive)
- **60928** — ISO Address Claim (Receive / Transmit)
- **65240** — ISO Commanded address (Receive)
- **126208** — NMEA — Acknowledged Group Function (Transmit)
- **126208** — NMEA — Command Group Function (Receive)
- **126208** — NMEA — Request Group Function (Receive)
- **126464** — PGN Transmit and Receive List (Receive / Transmit)
- **126993** — Heartbeat (Transmit)
- **126996** — Product Information (Receive / Transmit)
- **126998** — Configuration Information (Transmit)

Data PGNs

- **127250** — Vessel Heading (Receive)
- **127257** — Attitude (heading, pitch, heel) (Receive)
- **127258** — Magnetic Variation (Receive)
- **128259** — Speed water referenced (Receive)
- **129026** — COG & SOG, Rapid Update (Receive)
- **129029** — GNSS Position Data (Receive)
- **130306** — Wind Data (Transmit)

Index

A

Accessories 62–63
  DST transducers 62
  GNSS (GPS) 61
  Heading sensor 62
  SeaTalk NG adaptor cables 66
  SeaTalk NG backbone cables 65
  SeaTalk NG cables 63
  SeaTalk NG connectors 66
  SeaTalk NG kits 63
  SeaTalk NG Power cables 65
  SeaTalk NG spur cables 65
  Speed and Temperature transducers 63
  Transducer 62–63
Alpha display 14
Applicable documents 11

B

Backbone length,
  SeaTalk NG 33
Box contents 18

C

Cable
  Bend radius 29
  Protection 29–30
  Routing 29
  Security 29
  Strain relief 29
Cabling
  Circuit isolation 29
Circuit isolation 29
Connecting cables 30
Connections 41
  Battery 35
  Cable 41–42
  DeviceNet 43
  Distribution panel 34
  Gateway 42–43
  Power 32–33, 36
  Power connections
    Power distribution 34
  SeaTalk NG 43
  Wind transducer 41
Connections overview 30

D

Data sources 15
Declaration of Conformity 8
Diagnostics 52, 56
Dimensions
  Gateway 20
  Wind transducer 20
Distribution panel connection 34
Documentation 11
  Operation instructions 12

G

Gateway
  grounding 39
Grounding 39

H

Heading sensor 15

I

i70 / i70s 14
Installation
  Gateway 26
  Wind transducer 25
IP address 56

L

Load equivalency number 33

Location requirements 22
Wind transducer 22

M

Maintenance 49
Mast rotation angle 15
Mounting
Gateway 26
Wind transducer 25

N

Network length,
SeaTalk NG 33
NMEA 2000 ..... 14–15, 69
LEN 33

O

Operation instructions 12

P

Parts supplied 18
PGN 14–15
PGNs 69
Power
Battery connection 35
Distribution panel 34
Sharing a breaker 34
Power cable extension 35
Power connection point 33
Product dimensions
Gateway 20
Wind transducer 20
Product documentation 11
Product information 56
Product loading 33
Product overview 14
Product recycling (WEEE) 8
Product support 55

R

Rotating mast 46–47
Routine checks 49
RSW Wired
Configuration 45–46

S

SeaTalk NG 34
Adaptor cables 66
Backbone cables 65
Connectors 66
Kits 63
LEN 33
Load equivalency number 33
Power 32–33, 36
Power cables 32, 65
Spur cables 65
System loading 33
SeaTalk NG cables 63
Service Center 55
Servicing 49
Software 12
Spares 61
Support forum 57
System example 15

T

Technical specification
Conformance specification 59
Environmental specification 59
Physical specification 59
Power specification 59
Technical support 55, 57
Third-party compatibility 14–15
Training courses 57
Troubleshooting 51
Diagnostics 52
Network LED diagnostics 53
Wind data 51

V

Vessel heading 15

W

Warranty 8, 55
WEEE Directive 8
What's in the box 18
Wind transducer
  Configuration 45–46
Wire stripping 41